MODEL 5892 ADVANCE CONTROL BASE
FOR THE
MODULAR TABLE SYSTEM

MAINTENANCE and REPAIR MANUAL

30031 Ahern Avenue
Union City, CA 94587-1234
Bus: 510-429-1500 **Toll Free:** 800-777-4674 **Fax:** 510-429-8500

ã **OSI 2004**

IMPORTANT NOTICES

CAUTION:
To ensure safe operation of the equipment, please READ THESE INSTRUCTIONS COMPLETELY and keep this manual readily available to OR personnel for future reference.

Carefully observe and comply with all warnings, cautions and instructions placed on the equipment or described in this manual.

In this manual, the ⚠ WARNING symbol is intended to alert the user to the presence of important operation, maintenance, or safety instructions.

Dans ce manuel, le symbole ⚠ AVERTISSANT est projeté d'alerter l'utilisateur à la présence d'opération importante, l'entretien, ou les instructions de sûreté.

⚠ WARNING

Proper preoperative and intra-operative procedures must be followed to prevent venous stasis and pooling, pressure sore development, neuropathy, improper electro surgical tissue grounding, hypertension and hypothermia.

⚠ AVERTISSANT

Preoperative propre et les procédures dans opératifs doivent être suivis pour empêcher venous stasis et pooling, la pression développement endolori, la neuropathie, electro déplacé mettre à terre de tissu chirurgical, l'hypertension et hypothermia.

NOTE:
The application techniques outlined in these instructions are the manufacturer's suggested techniques. The final disposition of each patient's care as related to the use of this equipment rests with the attending physician.

This device is to be used by trained professional personnel only.

PROTECTION AGAINST ELECTRICAL SHOCK HAZARD:

This symbol indicates this equipment is an applied part TYPE B and is generally suiTable for applications involving external or internal contact with the patient, excluding the heart. The patient circuit is connected to protective earth and this equipment should be connected only to outlets with a protective earth ground.

LA PROTECTION CONTRE LE DANGER DE CHOC ELECTRIQUE:

Ce symbole indique que cet équipement est un B DE TYPE de partie appliqué et est généralement convenable pour les applications contact impliquant, externes ou internes avec le malade, excluant le coeur. Le circuit patient est connecté à la terre protective et cet équipement devrait être seulement connecté aux sorties avec un sol de terre protectif.

WARNING:

The "Hospital Only" or "Hospital Grade" attachment plug must be connected to an equivalent receptacle marked "Hospital Only" or "Hospital Grade" only.

AVERTISSANT:

Le "l'Hôpital Seulement" ou "le Degré d'Hôpital" le bouchon d'attachement doit être connecté à une prise équivalente marquée "l'Hôpital Seulement" ou "le Degré d'Hôpital" seulement.

WARNING/AVERTISSANT:

Connect batteries only with power cord unplugged and main switch off/ Connecter des piles seulement avec le cordon d'alimentation ont débranché et le commutateur principal de.

TABLE OF CONTENTS

1.0 INTRODUCTION 5
1.1 General Description 5
1.2 Specifications 5
1.3 Shipping 5
1.4 Storage 5
2.0 CONTROLS IDENTIFICATION 7
2.1 Major Component Identification 7
2.2 Model Number and Serial Number 8
2.3 Base Orientation 8
2.4 Casters 8
3.0 BASIC OPERATION 9
3.1 Control Operation 9
3.2 Rotation Safety Lock 9
3.3 180-Degree Rotation Lock Indicator 10
3.4 Tilt Drive Status Indicator 10
3.5 Hand Control Module 11
3.6 Synchronizing The Lateral Tilt Function 12
3.7 Tabletop Coupling Procedure 13
3.8 Tabletop Coupling Procedure With Top In Place 15
3.9 Rotation Procedures 15
3.10 Rotation Lock System 15
3.11 Rotation Procedure 16
3.12 Emergency Rotation Lock Override System 16
3.13 Retracting for Storage 17
4.0 PRE-OPERATIONAL FUNCTION CHECK 18
5.0 INSPECTION 19
5.1 Acceptance & Transfer 19
5.2 Preoperative 19
5.3 Postoperative 19
5.4 Annually 19
6.0 THE ELECTRICAL SYSTEM 20
6.1 Description 20
6.2 Power Cord 20
6.3 ON/OFF Power/Circuit-Breaker Switch 20
6.4 Battery Recharging 20
7.0 CLEANING and MAINTENANCE 21
7.1 Cleaning and Disinfecting 21
7.2 Lubrication 21
7.2 Preventative Maintenance 21
8.0 TROUBLESHOOTING 22
8.1 Electrical System 22
9.0 REMOVAL and REPLACEMENT of COMPONENTS 25
9.1 Head-end Cover 25
9.2 Head-end Pivot Assembly 26
9.3 Head-end Crossbar 26
9.4 Head-end Tilt Motor 26
9.5 Foot-end Cover 27
9.6 Foot-end Pivot Assembly 27
9.6 Foot-end Cross Bar 27
9.7 Foot-end Rotation Safety Lock Motor 28
9.8 Foot-end Rotation Safety Lock Clamp 28
9.9 Head or Foot-end Columns 28
9.10 Center Beam, Retractable 28
9.11 Casters 29
9.12 Hand Control 29
9.13 Batteries 30
9.15 Controller Printed Circuit Board (Controller) 34
9.16 On-Off Power Switch / Circuit Breaker 35

10.0 ADJUSTMENT of COMPONENTS 36
10.1 Tilt Actuator Rod-end Length 36
10.2 180 Degree Rotation Lock Sensor 36
10.3 Tilt Home & Tilt Left/Right Sensors 37
10.4 Rotation Safety Lock 38
11.0 TECHNICAL DRAWINGS and PARTS LISTS 39
11.1 Top-level Assembly Drawing and Bill of Materials 39
11.2 Head-end Pivot Assembly Drawing 39
11.3 Foot-end Pivot Assembly Drawing 39
11.4 Interconnect Wiring Diagram 39
11.5 Replacement / Spare Parts List 39
12.0 GLOSSARY of TERMS 40
13.0 OSI TECHNICAL SERVICE 41
13.1 Contact for Parts and Service 41
13.2 To order Replacement Parts (RP) 41
13.3 To return damaged parts (RGA) 41
13.4 To send a part or item here for us to repair (RA) 41

1.0 INTRODUCTION

1.1 General Description

This manual describes the use, maintenance, and repair of the Modular Table System (MTS) 5892 Advanced Control Base (5892 Base). It is the primary component of the system designed to support patients for a variety of surgical procedures. There are three bases available: Two "I" bases with manual tilt and lock functions, Model 5890 Retractable and Model 5891 Non-retractable base. Model 5892, with electric powered lateral tilt and lock functions is described here. Five procedure-specific Table Tops; Jackson Spinal, Imaging, Trauma, Endourology and Maximum Access™ Lateral Top are available for use on any of these three MTS Bases.

1.2 Specifications

• Maximum patient weight:	Table Top specific but not to exceed 500 lbs
• Height Range	34 - 48 inches for Orthopedic Top
• Trendelenburg Range	10-11° ±3°
• Powered Tilt Range	25° ±3°
• Power Input	120 VAC at 60 Hz or 230 VAC at 50 Hz and internal battery power
• Compatible Tabletops	All MTS tops equipped with gimbals.
• Overall Length	120 inches
• Retracted Length	73.5 inches
• Width	30 inches
• Maximum tilt torque	55 ft-lb
• Maximum brake torque	95 ft-lb
• Duty Cycle	4% or 2.5 minutes continuously per hour

1.3 Shipping

The 5892 Base must be shipped in a manner that prevents damage to its structural elements, caster wheels, electronics, and operating controls. Contact with solid objects in the environment must be prevented during shipment and storage, except at the four Casters. Banding for lateral constraint is to be limited to the base structure. Additionally, banding of the Head End Assembly to prevent movement of the trolley is necessary. It is not necessary to fully crate the 5892 Base if it is assured that no impact with foreign solid objects will be made during transit. The 5892 Base is to be shipped in an environment within the following limits:

- Ambient temperature -20° C to +50° C (32°F & 120°F)
- Relative humidity from 10% to 100%, including condensation
- Atmospheric pressure from 50 to 110 kPa.

1.4 Storage

WARNING:

WHEN NOT IN USE, STORE IN A CLEAN, DRY ENVIRONMENT WITH TEMPERATURE BETWEEN 32°F AND 120°F. WHEN NOT IN USE, IT IS RECOMMENDED THAT THE 5892 BASE BE PLUGGED INTO A PROPER AC RECEPTACLE WITH THE ON/OFF SWITCH IN THE "ON" POSITION TO MAINTAIN PROPER CHARGE OF THE BATTERIES.

AVERTISSANT:

Quand pas dans l'usage, le magasin dans un propre, sécher l'environnement avec la température entre 32°F et 120°F. Quand pas dans l'usage, il est recommandé que la 5892 Base soit connectée à une prise de courant alternatif correcte avec l'interrupteur (on-off) dans le “SUR” la position pour maintenir la charge correcte des piles.

2.0 CONTROLS IDENTIFICATION

2.1 Major Component Identification

The 5892 Base is designed to hold a Table Top that will provide a patient support that is free of any obstructions that might compete for space with the C-Arm. The major components of the 5892 Base are identified in the following figures.

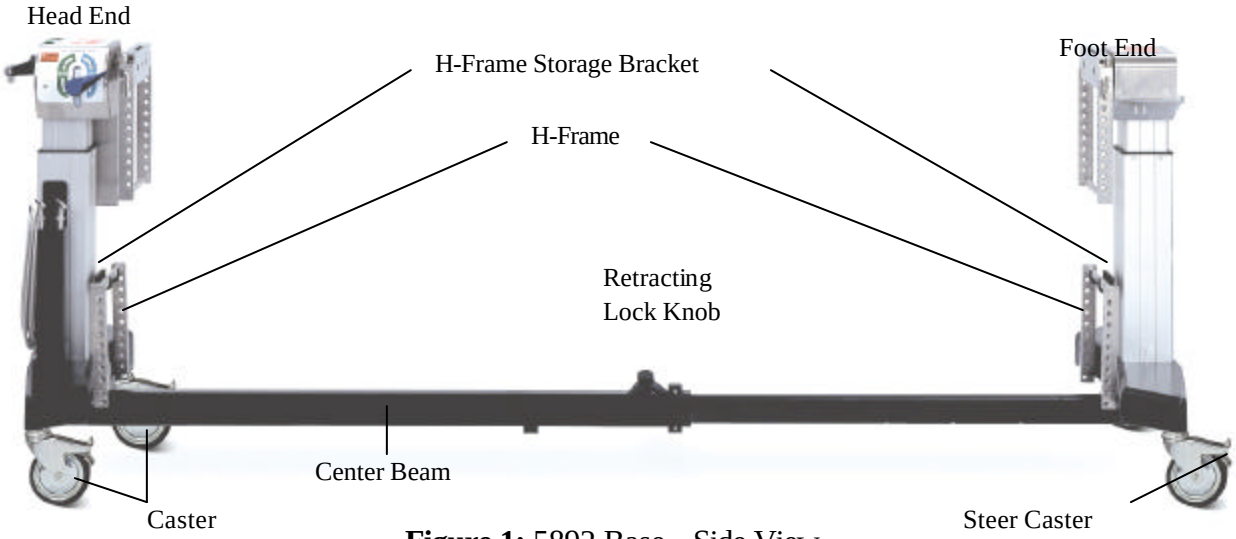

Figure 1: 5892 Base - Side View

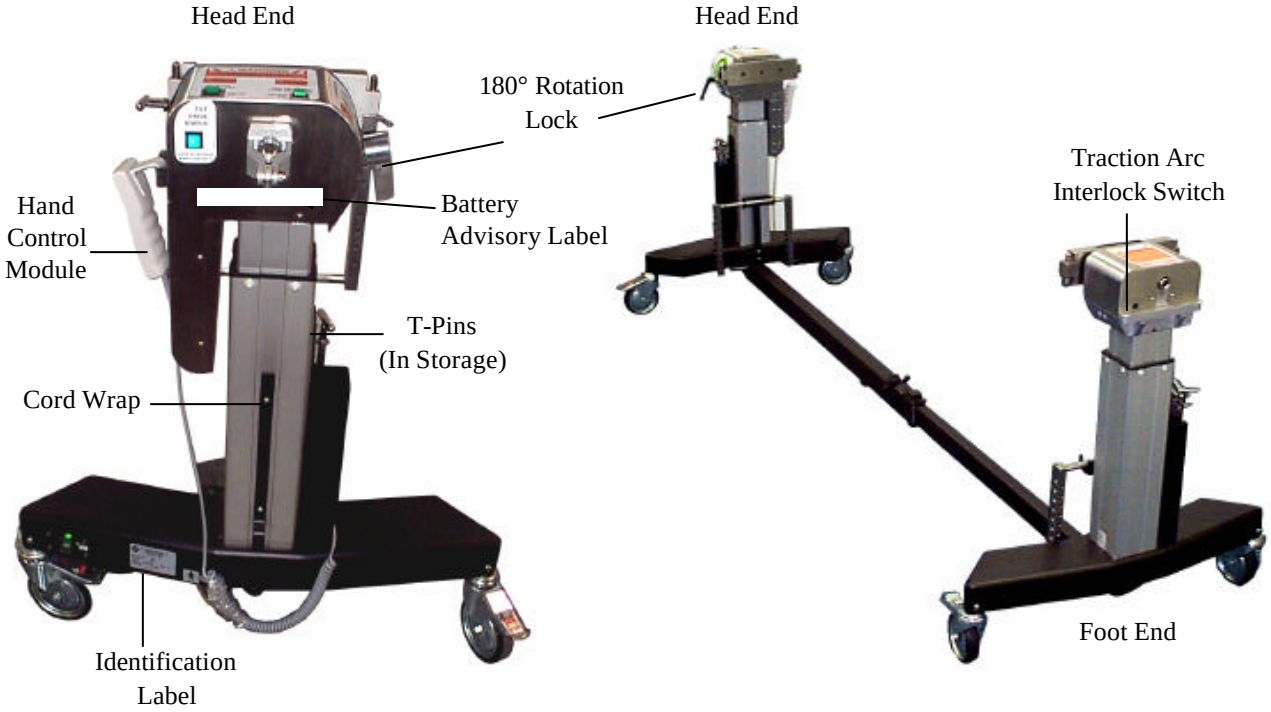

Figure 2: 5892 Base – Major Components

2.2 Model Number and Serial Number

The Model Number and Serial Number are printed on the Identification Label located at the Head End Base. This label is located to the right of the ON/OFF switch as shown below.

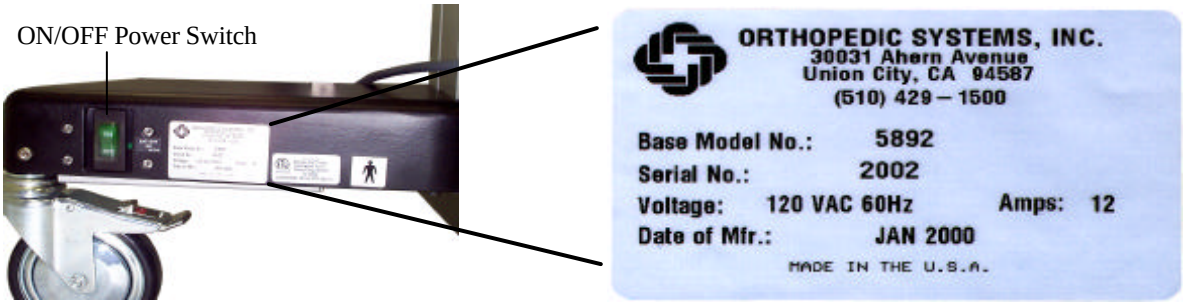

Figure 3: Head End; ON/OFF Power Switch – Serial Number Label

2.3 Base Orientation

The control end of the Base is considered the Head End, and the opposite end is the Foot End. The right side of the Base is the side to the operators right when standing at the Head End looking toward the Foot End Base. The general nomenclature and orientation of the Table is shown in Figure 1. Refer to the appropriate User Guide supplied with each Table Top for Table Top Component Identification and more detailed information about the use of each Table Top.

2.4 Casters

Each 5892 Base is equipped with three (3) Locking Casters and one (1) Steer Caster. The Steer Caster functions to allow the Table to roll along a straight path when pushed from the Head End. The Steer Caster is located on the right side of the Foot End. The Steer Caster has a green label marked "Steer". To lock the Table Base securely in place, it is necessary to engage the Lock on each of the four (4) Casters.

To lock a Caster Lock, step on the Lock Tab until you hear an audible click and the Tab remains in the down or locked position. To unlock the Caster, push the Unlock Button. When the Unlock Button is pressed, the Tab will click back to the original unlocked position.

Caster shown Unlocked

Caster shown Locked

Figure 4: Casters

3.0 BASIC OPERATION

The 5892 Base can be operated only on AC power. Plug the AC Power Cord into the proper AC receptacle depending on the voltage requirements of the 5892 Base. Refer to the label at the Head End Base for input voltage requirements. Turn the ON/OFF Power Switch to "ON". It will illuminate green indicating power is ON. The ON/OFF Power Switch is a combination power switch and circuit breaker. To reset this circuit breaker, turn the ON/OFF Power Switch "OFF" and back "ON".

3.1 Control Operation

The 5892 Base is controlled by means of a Hand Control that operates the Up/Down, Lateral Tilt and Trendelenburg / Reverse-Trendelenburg movements of the table. See Hand Control Section.
The Head-end Pivot Assembly of the 5892 Base is equipped with three indicator lights (shown below):

1. 180° Rotation Lock Indicator Light
2. Tilt Drive Status Light
3. Rotation Safety Lock Indicator Light

Verify that the Rotation Safety Lock switch is "ON" and the 180° Rotation Lock Lever is in the locked position. Under normal operation, the ON/OFF Power Switch should be illuminated green and Battery Status Light should not be illuminated.

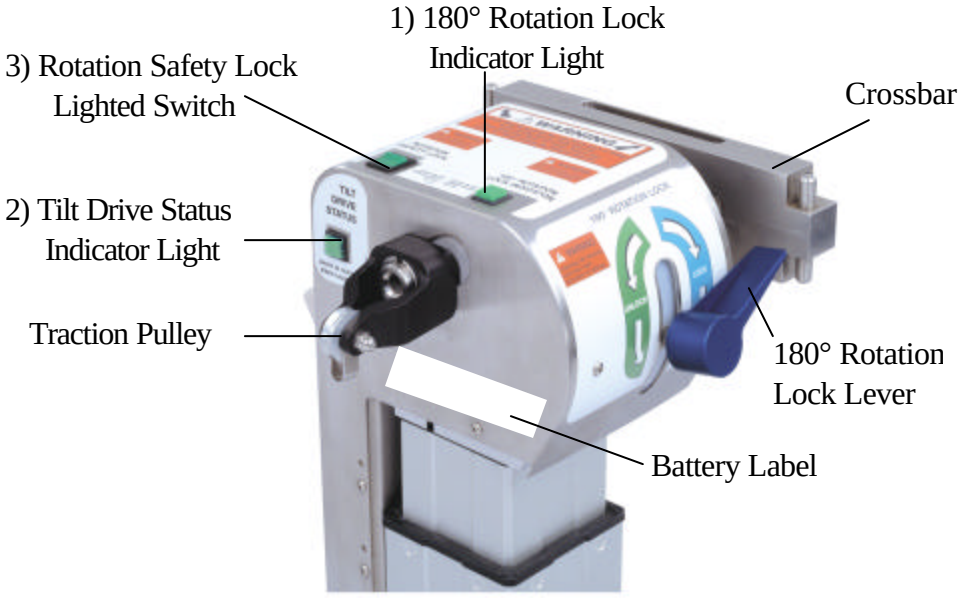

Figure 5: Head-end Pivot Assembly, Indicator Lights and Controls

3.2 Rotation Safety Lock

The Rotation Safety Lock Lighted Switch locks out the 180° Rotation function. This feature is designed to prevent unintended rotation of the Table Top. When the Rotation Safety Lock Lighted Switch is illuminated, the Table Top can still be Laterally Tilted by pressing the Left or Right Lateral Tilt button on the Hand Control. The Rotation Safety Lock Switch should be turned off only when a 180 rotation is to be performed. If the Rotation Safety Lock Switch is not illuminated, press the rocker switch to the "ON" position.

3.3 180-Degree Rotation Lock Indicator

When lit, the 180° Rotation Lock Indicator Light indicates the 180° Rotation Lock is engaged and the table cannot be rotated 180°. If the 180° Rotation Lock Indicator is not lit, rotate the Rotation Lock Lever clockwise until the light is illuminated.

NOTE: *If a 180° rotation is to be performed, the Rotation Lock Lever should be rotated counterclockwise approximately one half rotation past the point that the Rotation Lock Indicator Light goes out. Rotating the Lock Lever to this point lessens the drag of the friction control, thereby allowing the Table Tops to rotate more freely during the rotation. If even less friction is desired, the Lock Lever may be rotated further, counterclockwise, as necessary.*

After the rotation is complete, rotate the Rotation Lock Lever clockwise until the Rotation Lock Indicator Light is illuminated.

NOTE: *When the Rotation Lock Indicator Light is not illuminated, the Table Top is unlocked regardless of how much the Lock Lever has been rotated clockwise or counterclockwise. After a 180° Rotation, always rotate the Lock Lever until the Rotation Lock Indicator Light is illuminated.*

3.4 Tilt Drive Status Indicator

The Tilt Drive Status Indicator Light is lit when the power lateral tilt mechanism is in the center position of the +/- 25-degree powered lateral tilt range. If the Tilt Drive Indicator is not illuminated, operate the lateral tilt function using the Hand Control in the appropriate direction until the indicator is lit. The Head End Crossbar should be horizontal when the Tilt Drive Status Indicator is lit. If the Head End Crossbar is not horizontal, the internal power tilt mechanism is out of synchronization with the Crossbar. Refer to Synchronizing the Lateral Tilt Function to reset this function.

3.5 Hand Control Module

Each 5892 Base is equipped with a hand-held Pendant Control (Hand Control), which is on a storage bracket attached to the Head-end. The Hand Control allows the operator to raise, lower, Trendelenburg, reverse-Trendelenburg, and laterally tilt the table. The selected function will continue to operate until the button on the Hand Control is released.

NOTE: *It is recommended that a Table Top always be connected between the Head and Foot Ends when operating the powered controls.*

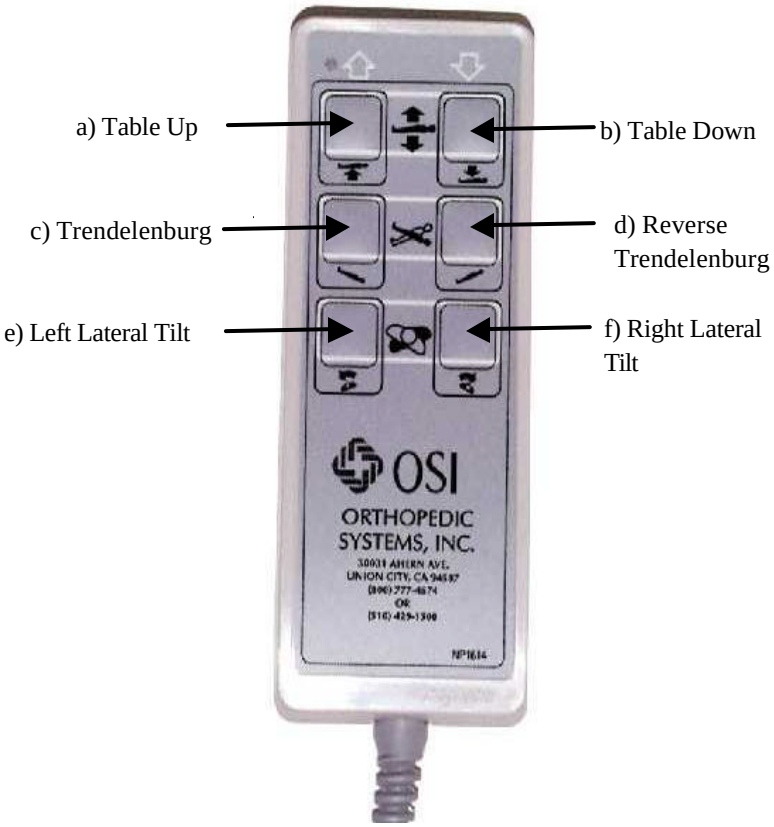

Figure 6: Hand Control

To Raise theTable, depress the Table Up Button (a) on the left side of the Hand Control with the arrow that points in the "up" direction.

To Lower the Table, depress the Table Down Button (b) on the right side of the Hand Control with the arrow that points in the "down" direction.

To Trendelenburg the Table, depress the button on the left with the arrow that indicates Foot Up (c) until the desired Trendelenburg angle is achieved. This lowers the Head-end Column and raises the Foot-end Column simultaneously. If the Table is in a fully lowered position, only the Foot-end will rise to achieve the desired Trendelenburg angle.

To Reverse Trendelenburg the Table, depress the button on the right with the arrow that indicates Foot Down (d) until the desired Reverse Trendelenburg angle is achieved. This raises the Head-end Column and lowers the Foot-end Column simultaneously. If the Table is in a fully raised position, only the Foot-end will lower to achieve the proper Reverse Trendelenburg angle.

To Laterally Tilt To The Left, depress the Left Tilt button (e) on the left side of the Hand Control.

To Laterally Tilt To The Right, depress the Right Tilt button (f) on the right side of the Hand Control.

NOTE: *In the event a Traction Arc is placed on the Base, the Tilt function has been made inoperable.*

3.6 Synchronizing The Lateral Tilt Function

The Power Tilt Drive and the Head-end Crossbar are synchronized so that the drive is in the middle of its travel range when the Crossbar is level. However, the Drive and Crossbar can become unsynchronized during manual rotation of the Crossbar. If this occurs, they need to be re-synchronized. Furthermore, the Head-end Crossbar and Foot-end Crossbar can be unsynchronized (not at the same tilt angle) if the 5892 Base was operated without a Table Top in place. The Crossbars must be synchronized to each other, as well as to the Tilt Drive.

NOTE: *Never attempt to attach a Table Top to the 5892 Base if the Head and Foot-end Crossbars are not horizontal in all planes. Tilt Drive Status, Rotation Safety and 180° Rotation Lock Lights should be illuminated. Doing so may cause damage to the Table Top or the Tilt Drive function.*

To verify synchronize of the Tilt Drive and Head-end Crossbar:

1. Confirm that the 180° Rotation Lock is engaged.
2. Confirm that the Rotation Safety Lock is engaged.
3. Use the Hand Control tilt buttons to rotate the Head-end Crossbar until it is level.
4. Observe the Tilt Drive Status Indicator Light. If it is ON, then the Head-end Crossbar is synchronized to the tilt drive. If it is OFF, then they are not synchronized.
5. If you could not level the Head-end Crossbar using the tilt buttons, then the drive and crossbar are not synchronized.

To re-synchronize the Tilt Drive and Head-end Crossbar:

Case 1: Table Top is coupled to the 5892 Base.

1. Confirm Table Top is clear (i.e., no tools)
2. Turn ON/OF Power Switch to "ON".
3. Turn OFF the Rotation Safety Lock. The switch should go dark.
   Rotate 180° Rotation Lock Handle counter-clockwise until Rotation Lock Indicator Light goes out.
   Caution *– this allows the Table Top to swing freely.*
4. The Drive Mechanism will automatically return to the middle of its range. While this occurs, you will hear the Tilt Motor running, but the Table Top will only rotate a little (if at all).
5. When the Tilt Motor stops, observe the Tilt Drive Status light. If it is ON, then the drive is in the middle of its travel range.
6. Verify that the Head and Foot-end Crossbars are level.
7. Turn ON the Rotation Safety Lock. The Indicator Light should illuminate.
8. Rotate the 180° Rotation Lock Handle clockwise until it is engaged (Lock Indicator Light is illuminated).
9. The Tilt Drive is now synchronized to the Crossbars, and the Crossbars are synchronized to each other.

Case 2: A Table Top is not coupled to the 5892 Base.

1. Turn ON/OF Power Switch to "ON".
2. Turn OFF the Rotation Safety Lock. The switch should go dark.
   Caution *– this allows the Foot-end crossbar to rotate freely; any load on the Crossbar can make it swing.*
3. Rotate the 180° Rotation Lock Lever counter-clockwise until it is disengaged.
   Caution *– this allows the Head-end Crossbar to rotate freely; any load on the Crossbar can make it swing.*

4. The Drive Mechanism will automatically return to the middle of its range. While this occurs, you will hear the Tilt Motor running, and the Head-end Crossbar may rotate.
5. When the Tilt Motor stops, observe the Tilt Drive Status light. If it is ON, then the Drive is in the middle of its travel range.
6. Manually level the Head-end Crossbar.
7. Manually level the Foot-end Crossbar.
8. Turn ON the Rotation Safety Lock Switch. The Switch should illuminate.
9. Rotate 180° Rotation Lock Lever, clockwise, until it is engaged (Lock Indicator Light is lit).
10. The Tilt Drive is now synchronized to the Crossbars and the Crossbars are synchronized to each other.

3.7 Tabletop Coupling Procedure

The Modular Table Tops may be interchanged and coupled to the 5892 Base as needed to provide flexibility and specific procedural capability. Position the 5892 Base and engage all four Caster Locks. Only Table Tops with Gimbals may be used with the 5892 Base.

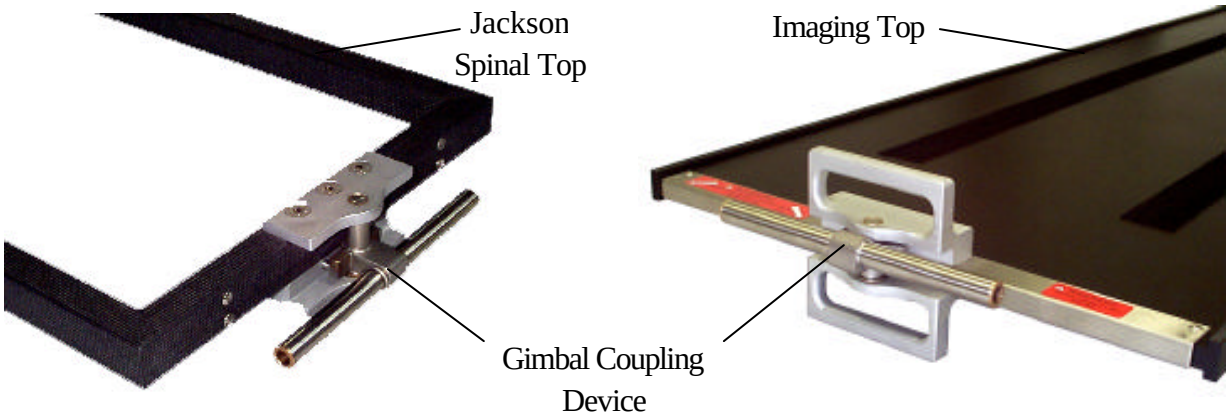

Figure 7: Jackson Spinal Top & Imaging Top with Gimbal Mounting Assemblies.

NOTE: *Verify that the Jackson Spinal Top or the Imaging Top being used has Gimbals. Never attach a Jackson Spinal Top or Imaging Top to the 5892 Base that does not have Gimbals.*

The following procedure assumes the Foot End and Head End Columns do not have Table Tops coupled in place. The coupling procedure is as follows:

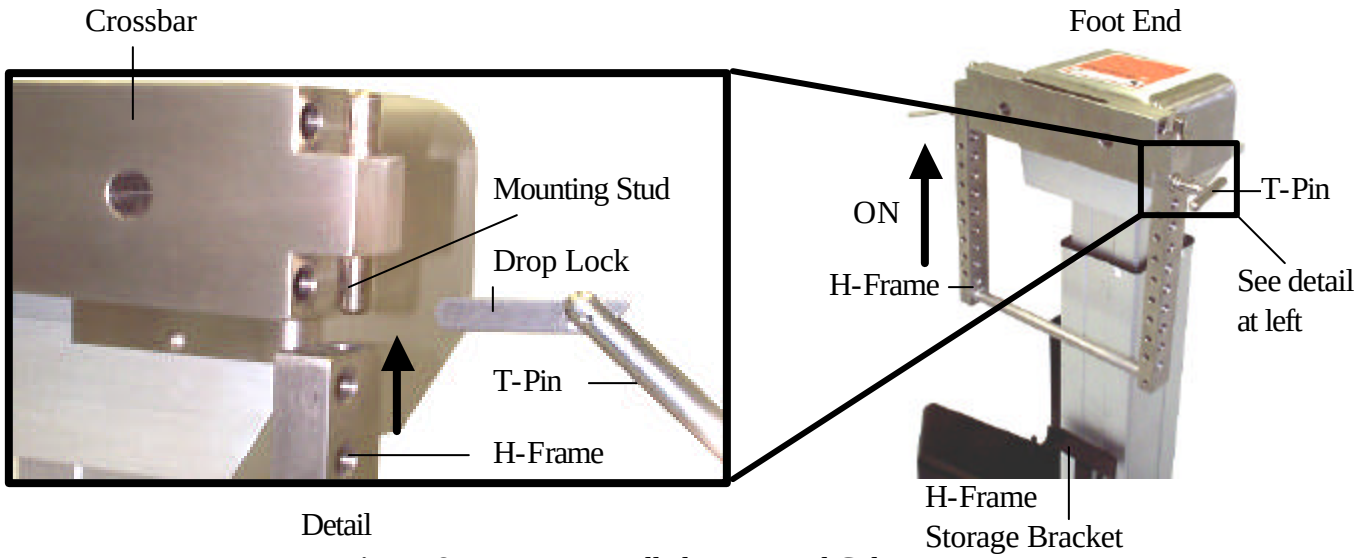

Figure 8: H-Frame Installed - Foot End Column

Figure 9: T-Pin Assembly

1. Remove the H-Frame from the H-Frame Storage Bracket located on the Head-end Column. Install the H-Frame to Head-end Crossbar and secure with a T-Pin. The T-Pins are stored in the T-Pin Quiver located adjacent to each column. The T-Pin must extend completely through both sides of the H-Frame and the Drop Lock should be in sight and pivot freely. The Head-end Crossbar is attached to a Sliding Assembly that adjusts superiorly and inferiorly to accommodate Trendelenburg and Reverse Trendelenburg. Fully retract the Head-end H-Frame against the Head-end Column.

NOTE: *If the H-Frame is not aligned with the mounting studs, it may bind. Do not force it. Lift the H-Frame off and repeat until it mounts easily.*

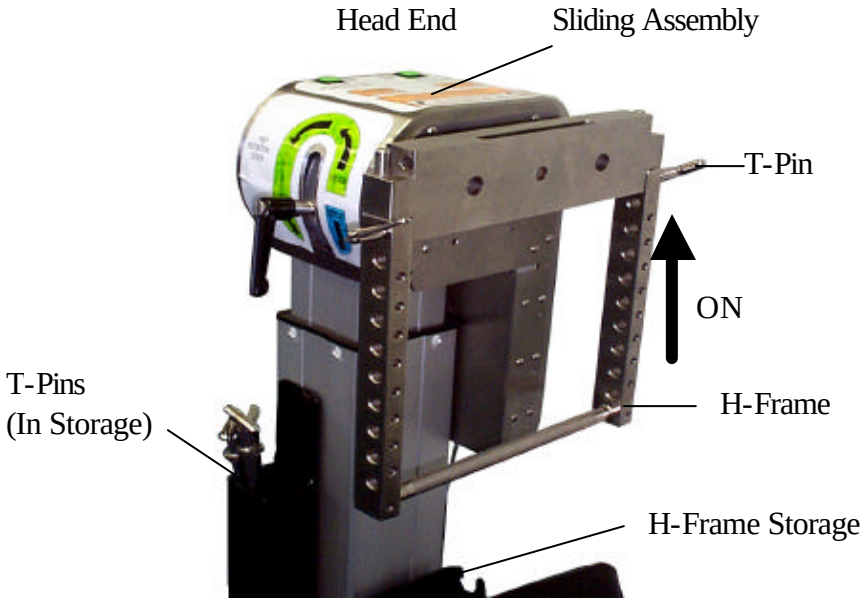

Figure 10: Head-end Pivot Assembly, H-Frame Installed

NOTE: *Two people are required to complete the following sequence.*

2. Select the appropriate mounting-hole position on the H-Frame to support the tabletop. Hole selection will differ depending on the top selected and the procedure that would be performed. Align the mounting tube with the hole in the H-frame and push the T-pin completely through the H-frame and mounting tube on the foot end.

NOTE: *Verify that the T-pin is inserted through the H-frame, passes completely through the table mounting tube, and through the opposite side of the H-frame and the T-pin drop lock is in sight and pivots freely. Failure may result in the tabletop being dropped.*

3. To couple the Head End of the Table Top, slide the H-Frame and Crossbar away from the Foot-end as necessary to accommodate the length of the Table Top. Align the holes in the Head-end H-Frame and the Table Coupling Device. Push the T-Pin completely through both sides of the H-Frame and the Coupling Device making certain that the Drop Lock is in sight and pivots freely. The Head-end and the Foot-end of the Table Top are normally coupled at the same hole in the H-Frame. The only exception is when extreme Trendelenburg is needed.

NOTE: *Prior to Rotation, verify that all Table Coupling Devices and H-Frames are properly installed and the T-Pins pass completely through the H-Frames and Crossbars with the Drop Lock in sight and pivots freely. Two (2) T-pins and Drop Locks should be visible and checked at each end of the Table. Please read more about this process in the appropriate top-specific User Guide.*

3.8 Tabletop Coupling Procedure With Top In Place

When one Table Top is already coupled to the 5892 Base and you are coupling a second Top in order to change Tops or facilitate a 180-degree tabletop rotation, the slide mechanism of the Head End Sliding Assembly will be held in a fixed position due to the fixed length of the first Top. This requires a different procedure to couple the second Top.

With two people holding the second Top:

1. Attach the Head-end H-frame as described above to the Table Top at the desired Mounting Hole.
2. Position the second Table Top and attach the Head-end H-Frame to the Head-end Crossbar.
3. Attach the Foot End H-Frame to the Foot-end Crossbar surrounding the Table Top Coupling Device.
4. Connect the Table Top Coupling Device to the Foot-end H-Frame at the desired mounting hole. Verify that the Table Top is coupled at the desired height at the Head End.

3.9 Rotation Procedures

The 5892 Base provides the capability of rotating a tabletop 180 degrees. This is a manually activated function.

NOTE: *At least two people are required to hold and control the rotating motion of the Table Tops. Prior to rotation, verify that all tabletop coupling devices and H-frames are properly installed; the T-pins pass completely through the H-frames and crossbars with the drop locks in sight and able to pivot freely. Four (4) T-pins and drop locks should be visible and checked at each end of the Table.*

3.10 Rotation Lock System

See Figure 11

The 5892 Base is designed to engage the Rotation Safety Lock automatically whenever the ON/OFF Power Switch is turned “OFF”. Automatic Rotation Safety Lock engagement ensures that the Table Top cannot rotate laterally without power.

3.11 Rotation Procedure

With an attendant at the Head-end of the Table:

1. Release the 180° Rotation Lock by rotating the lever *counterclockwise* until the 180° Rotation Lock Indicator Light goes out.
2. Advise the attendants holding the tabletops that the Rotation Safety Lock is about to be released.
3. Release the Rotation Safety Lock by pressing the rocker switch to the OFF position. Observe that the Indicator Light goes out.
4. Rotate the tabletops.

NOTE: *The attendant performing the Rotation must rotate the tabletops 180° toward himself or herself without stopping until the complete 180° rotation is achieved.*

After the Rotation:

1. Immediately engage the Rotation Safety Lock by pressing the rocker switch to the ON position and observe that the Indicator Light is illuminated.
2. Lock the 180° Rotation Lock by rotating the Lever *clockwise* until the 180° Rotation Lock Indicator Light is illuminated.

NOTE: *The attendant performing the Rotation may now release the Table Tops.*

3.12 Emergency Rotation Lock Override System

The 5892 Advanced Control Base is designed to engage the Rotation Safety Lock automatically whenever power is lost, (either by turning OFF the main Power Switch or in the event of a power interruption). Automatic Rotation Safety Lock engagement ensures that the Table Top cannot unintentionally rotate laterally without power.

If power is lost during a 180° rotation, the Rotation Safety Lock will engage and prevent the table from rotating. The 5892 table base has an Emergency Rotation Lock Override Button (ERLOB), located under the head-end and to the right side of the base (see figure 11). To override the lock, depress and hold the ERLOB button, this will release the Rotation Safety Lock; release of the ERLOB butoon will engage the Rotation Safety Lock. During the override mode the indicator lights will illuminate for thirty seconds, then turn off, and the battery fault lamp will also illuminate indicating a loss of AC power.

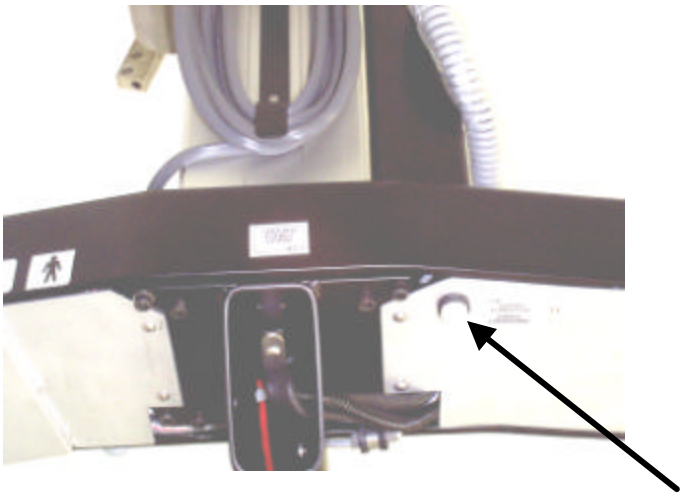

Figure 11: Head-end, bottom view – Emergency Rotation Lock Override Switch

3.13 Retracting for Storage

The 5892 Base retracts from 130 inches to 72-1/2 inches for storage.

To retract the 5892 Base:

1. Lock the Head-end Casters and unlock the Foot-end Casters.
2. Loosen the Retracting Locking Knob found on the Base.
   NOTE**:** *This knob will become completely separated from the 5892 Base if turned too far counter clockwise.*
3. Push the Foot-end of the 5892 Base toward the Head-end until the Foot-end is retracted to its minimum length.
4. Tighten the Locking Knob.
5. Unplug the Power Cord and store it on the Cord Wrap for transfer of the Base. The Base and Table Top are now ready for storage.

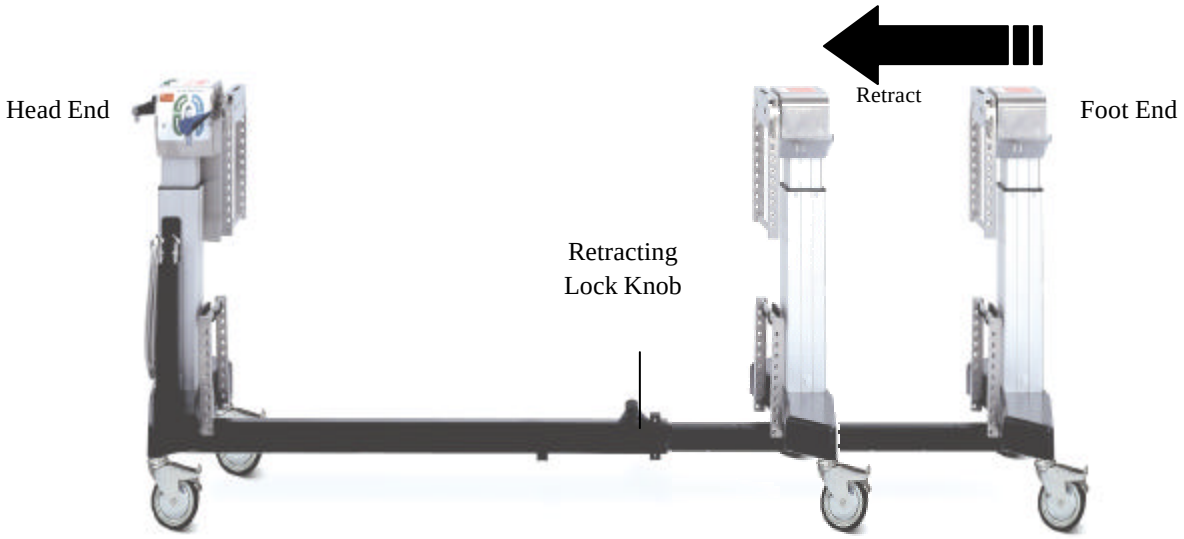

Figure 12: Retracting the MTS Base

4.0 PRE-OPERATIONAL FUNCTION CHECK

After reading the Basic Operation section of this manual, plug the power cord into the appropriate receptacle, and turn the ON/OFF Power Switch to “ON”.

Perform all steps in this procedure. For a complete definition of reference terms used in this procedure, please refer to Glossary of Terms.

In succession, press and hold each of the four buttons on Hand Control and confirm the operation of the following functions:

1. “TABLE UP”
2. “TABLE DOWN”
3. “TRENDELENBURG”
4. “REVERSE TRENDELENBURG”
5. “TILT LEFT”
6. “TILT RIGHT”
7. Engage the Rotation Safety Lock (switch to “ON”) and the 180-degree Rotation Locks (blue handle clockwise, indicator light illuminates).
8. Release the Rotation Safety and 180 Rotation locks.
9. Confirm Head-end and Foot-end Crossbars are “unlocked” by rotating each one complete revolution.
10. Re-engage both the Rotation Safety and 180 Rotation locks.
11. Confirm Head-end and Foot-end Crossbars are “locked”; both Crossbars firmly resist rotation.
12. Using Hand Control, press and hold “Tilt Left” button to end of travel. Confirm the Foot-end Crossbar rotates freely.
13. Repeat the same when “Tilt Right” is operated.
14. Emergency Rotation Lock Override Switch:
    - 14.1. Confirm Foot-end Crossbar is “unlocked” by rotating one complete revolution.
    - 14.2. Switch main “ON/OFF” power-switch to “OFF”; confirm Emergency Rotation Lock engages.
    - 14.3. Press and hold the Emergency Rotation Lock Override Switch button; confirm the Foot-end Crossbar is free to rotate.

WARNING:

Report any malfunction to your OSI representative immediately.

AVERTISSANT:

Rapporter n'importe quelle mauvaise fonctionnement à votre représentant de OSI immédiatement.

5.0 INSPECTION

5.1 Acceptance & Transfer

Upon receipt of your 5892 Base, remove any protective wrapping or packaging. Visually inspect all surfaces for freight damage. Check each caster for proper rolling operation.

NOTE: *Any freight damage must be reported to the freight carrier immediately upon delivery. It is the responsibility of the recipient to make freight damage claims.*

1. Verify receipt of the Completeness and Test Report provided with each 5892 Table.

2. Read the Model/Serial Number Identification Label found at the Head-end of the 5892 Base to confirm the serial number and the input power requirements.

3. Place the 5892 Base in an area with at least 4 feet of clearance on all sides.

4. Perform Pre-Operational function check.

5.2 Preoperative

1. Perform Pre-Operational function check

5.3 Postoperative

1. Perform Pre-Operational function check.

5.4 Annually

1. Perform Pre-Operational function check. Thoroughly clean the table as described CLEANING and MAINTENANCE section. Pay special attention to the cleanliness of the controls as excessive soil could affect function.

2. Inspect the power cord for cuts in the insulation or damage to the connector.

3. Check to see that all fasteners are tight.

4. Check the operation and security of the Floor Locks with and without a load in place.

5. Perform complete Preventative Maintenance Checklist (contact OSI Technical Service for checklist).

6.0 THE ELECTRICAL SYSTEM

6.1 Description

The 5892 Base uses an external AC power source for operation, when plugged into a proper AC receptacle and the "ON/OFF" Power-switch is in the "ON" position. The internal, rechargeable batteries are only for the Emergency Rotation Lock Override and are automatically recharged whenever the 5892 Base is plugged into an AC power source and the ON/OFF power-switch is in the "ON" position.

6.2 Power Cord

The 5892 Base is equipped with a standard EIC power cord with the appropriate 120 VAC hospital grade connector (230 VAC versions do not include the power cord connector).

6.3 ON/OFF Power/Circuit-Breaker Switch

An ON/OFF Main Power-switch is mounted at the Head-end of the 5892 Base. This switch also serves as a circuit breaker and in the event of an overload condition this switch will trip off. To reset, push to the "OFF" position and then the "ON" position. Next to it, a green "Power On" light illuminates indicating that the table power is on.

Caution: *Determine the source of the overload prior to resetting this switch.*

6.4 Battery Recharging

The 5892 table base includes rechargeable batteries for use during loss of power during a rotational movement. The batteries are under constant charge while the table base is pluged into an AC power source and the power switch is in the "ON" position. When the 5892 table base is not in use, it is recommended that the table is plugged in, and the power switch is in the "ON" position, the rechargeable batteries require a minimum of 18 hours of charge per week. To ensure full charge it is recommended that the table base be plugged in when the table base is not in use.

If the 5892 table base is plugged into an AC power source, the battery fault light should not be illuminated. After the 5892 table base is unplugged from an AC power source, the battery fault light will illuminate for thirty seconds then turn off.

If the battery fault light is illuminated while plugged into an AC power source, there is a faulty battery condition, do not attempt to operate the 5892 table base to determine the battery fault. Contact Technical Services for repair information or refer to section 9.13 Battery Removal and Replacement.

7.0 CLEANING and MAINTENANCE

7.1 Cleaning and Disinfecting

Note: *The Head and Foot-end Columns of the 5892 Base are not sealed, therefore:*

- *Never pour any liquid directly onto the table.*
- *Never allow any liquid to enter the extensile joint of the columns.*
- *Never subject the 5892 Base to an equipment washing machine.*

NOTE: *Failure to thoroughly dry any surface after cleaning and disinfecting may result in rust. It is important to dry the 5892 Base to prevent rusting. Rust formation can prematurely shorten the useful life expectancy of the 5892 Base.*

USE OF IODOPHORS WILL CAUSE STAINING.

Table Exterior:

1. Exterior surface should be regularly wiped clean with a mild detergent solution and wiped dry with a soft lint-free cloth.
2. Care should be taken to avoid exposing the table to excessive moisture. Flooding, fogging or steam cleaning is not recommended and will void any warranty.
3. Blood or other fluids, etc., if allowed to remain on the table for a long period of time, will require special cleaning to remove. A 5% acetic acid solution or white vinegar and water solution is especially good for this purpose.
4. Cleaning with a good commercial cleaning compound, such as Stainless Steel Magic or Acme White Finish, and then buffing the surface by hand can correct staining and discoloration of plated or stainless steel surfaces.
5. To disinfect exterior surface use a quaternary ammonium or similar type disinfectant compound according to manufacturer's directions for use. Wipe dry with a soft lint-free cloth.

- Casters should be cleaned and disinfected in the same manner as table exterior.

7.2 Lubrication

Table Exterior:

Following a thorough cleaning and decontamination of the table, silicone lubricant spray may be used on most of the exposed inner head and foot-end columns and inner retractable beam. No other lubrication is necessary.

Table Interior:

All of the internal moving parts of the 5892 Base receive factory lubrication which, under normal use, provides lubrication for the life of the equipment.

7.2 Preventative Maintenance

Contact OSI Technical Service for a complete Preventative Maintenance Checklist.

8.0 TROUBLESHOOTING

8.1 Electrical System

In the advent of a table malfunction, the first item to investigate is the input power. Be certain that the Power Cord is plugged into a live electrical outlet and the Power Switch is switched "ON". The ON/OFF Power Switch will illuminate green.

WARNING:

Before removing any sheet metal covers the table must be turned off and unplugged. Dangerous high voltage may be present in the circuitry under the covers. Only trained technicians should perform this task.

AVERTISSANT:

Enlever de Befor n'importe quel métal de drap couvre la table doit être tournée de et débranché. Dangereux à haute tension peut être actuel dans le circutry sous les couvertures. Technitions seulement entraîné doit exécuter cette tâche.

SYMPTOM	INSPECT	ACTION
No column function either end.	Check power. Check that circuit breaker (light is green). Check Hand Control and cord. Check electrical connector at base of Head or Foot-end Columns.	Plug in. Reset breaker, turn on. Plug in connector.
No column function Head-end	Check Hand Control. Check electrical connector at base of Head-end Column.	Plug in connector.
No column function Foot-end	Check Hand Control and cord. Check electrical connector at base of Foot-end Column.	Plug in connector.
Rotation friction control won't stop Rotation-Head or Foot-end.	Tighten lever to Max. Check brake band.	Adjust brake tension. Adjust handle to proper range. Replace if necessary.
Caster won't lock/unlock	Check locking for above wheel for damage.	Replace Caster.

FUNCTION GUIDE		
Command:	**Result:**	**If not, determine if**
(Hand Control) Table Up.	Both columns up.	Table power is off. Power to PC board is not connected. Hand Controller is non-operative, or not plugged in. Cable from PC board to column is not connected, or is faulty. If none of these are the problem then the column or the PC board is faulty.
Table Down.	Both columns down.	Same as for Table Up.
Trendelenburg.	Head-end column down and foot-end column up.	Same as for Table Up.
Reverse Trendelenburg.	Foot-end column down and head-end column up.	Same as for Table Up.
Tilt left or right w/Rotation Safety Lock switch off.	Tilt motor drives	Table power is off, power supply is not operating correctly, power to PC board is not connected, Hand Control is non-operative, Hand Control is not plugged in, PC board is non-operative, cabling is not connected or is faulty, tilt motor is faulty, brake on sense is closed, brake on sense wire is shorted, either limit switch is faulty, either limit switch is open, limit switch wiring is disconnected.
Rotation Safety Lock switch off.	Brake releases.	Table power is off. Power to PC board is not connected. Power supply is not operating. Cable from PC board to column is not connected. Cable to column is faulty. Brake off switch is faulty. Wire connection to switch is faulty. Traction arc switch closed. Traction arc switch wiring shorted. Limit switch faulty. Limit switch operating mechanical error, limit.
Rotation Safety Lock switch on.	Brake engages.	See rocker switch off. Also verify switch, wiring, and mounting of brake on sensor if brake is weak, brake force adjustment is incorrect.
Tilt L or R w/ Rotation Safety Lock switch on.	Brake releases; tilt motor drives.	Same as tilt with rocker switch off. Additionally: brake motor faulty, wiring not connected.
Release Tilt button.	Tilt motor ceases; brake engages.	Hand Control faulty, PC board faulty. Same as for tilt w/rocker on.
Release button. (all functions except Tilt when rocker switch is on).	Immediate cessation of above. No additional function.	Hand Control faulty, PC board faulty.

Command:	Result:	If not, determine if:
Traction arc switch closed. Tilt left or right.	Tilt motor disabled, brake motor disabled.	Faulty switch, broken wiring connection, switch adjustment incorrect, PC board faulty.
Rotation Safety Lock switch off.	Brake motor disabled.	Same.
Handle Loose.	Tilt motor drives until tilt home LED lights.	Power off, power to PC board not connected, power supply non-op, PC board non-op, cable from PC board to tilt motor not connected, tilt motor non-op, home sensor faulty, home sensor wiring shorted, sensor misadjusted, 1/r sensor faulty, 1/r sensor wiring shorted or disconnected, sensor misadjusted, lock sensor faulty, lock sensor wiring disconnected, traction arc switch closed, traction arc switch wiring shorted.
Rotation Safety Lock switch on. Foot crossbar tilted left or right.	Tilt left or right DISABLED.	Tilt left or right limit switch faulty, wiring disconnected.
Rotation Safety Lock off. Power down.	Brake engages. LED turns on for 15-25 seconds later, LED off.	PC board faulty, motor faulty, wring to motor disconnected, LED faulty; wiring disconnected. PC board faulty.
Rocker switch off. Rotation Safety Lock release button on.	Lock releases. LED's on.	Emergency power button faulty, button wring not connected, PC board faulty, motor faulty, wiring to motor disconnected. LED faulty; wiring disconnected.
Rotation Safety Lock release button off.	Lock engages 15-25 seconds later, LED off.	PC board faulty, motor faulty, wiring to motor disconnected. PC board faulty.

9.0 REMOVAL and REPLACEMENT of COMPONENTS

Head-end

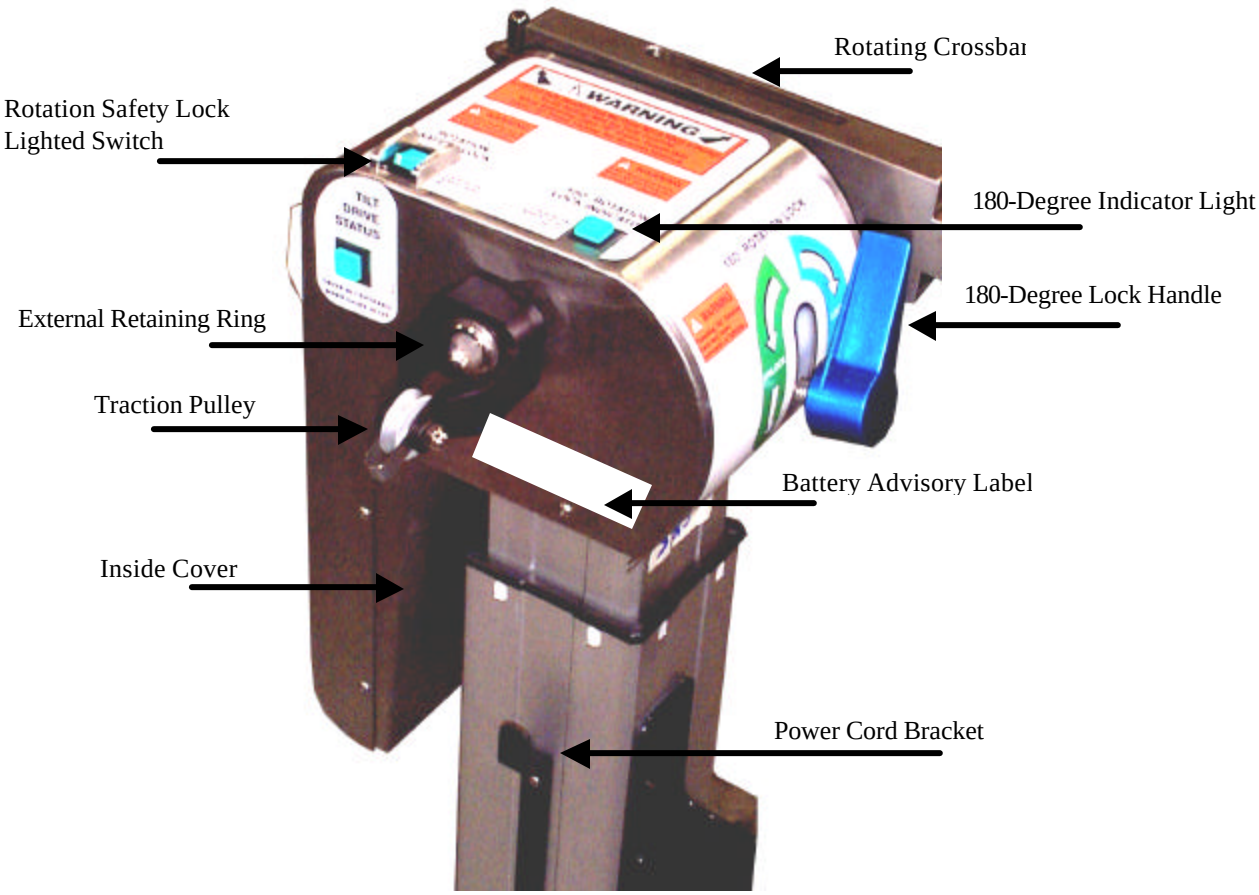

Figure 12: Head-end Pivot Assembly

9.1 Head-end Cover

See Figure 12: Head-end Pivot Assembly.

1. Turn Power-switch to "OFF", disconnect Power Cord from power source (AC outlet), allow 30 seconds for discharge.
2. Remove 1-inch external retaining ring using snap-ring pliers.
3. Slide off Traction Pulley Assembly.
4. Remove 180-degree Rotation Lock Handle by rotating counterclockwise until free.
5. Remove cover screws, except lower screws, from both sides of cover using 1/8-inch hex key.
6. Remove lower screws on both sides of cover and remove inside panel.
7. Carefully slide cover away from pivot assembly along tilt axis.
   NOTE: *Wires still connect lights and switches on Head-end Cover. Lifting out 180-degree Rotation Lock Indicator Light will help prevent damage.*
6. Rest cover onto Power Cord Bracket using Hand Control mounting bracket.

9.2 Head-end Pivot Assembly

See Head-end Pivot Assembly Drawing.

1. Remove head-end cover per procedure.
2. Disconnect electrical cable attached to the cover.
3. Remove the ground wire screw.
4. Disconnect electrical cable at top of head-end column.
5. Remove the 10-32 socket-head screw underneath of the trolley in the groove at front.
6. Slide the Head End Assembly away from you and remove it from base.
7. Install replacement in the reverse order.

9.3 Head-end Crossbar

See Head-end Pivot Assembly Drawing.

1. Remove head-end cover per procedure.
2. Unscrew Spring-plunger three (3) turns using 5/32inch hex key.
3. Rotate Crossbar for visibility of two (2) ¼-20 setscrews in clamp opening; remove setscrews using 1/8inch hex key.
4. Rotate Crossbar for visibility of single 5/16-18 setscrew in clamp opening; loosen 1 to 2 turns using 5/32inch hex key.
5. Rotate Crossbar for visibility of clearance hole in the clamp opening; insert 3/16inch diameter drift or pin punch and tap slightly to free key on far side. Remove drift or pin punch.
6. Remove Crossbar by sliding clear out of pivot assembly.

9.4 Head-end Tilt Motor

See Head-end Pivot Assembly Drawing.

1. Remove head-end cover per procedure.
2. Disconnect Tilt-motor wire from wire harness.
3. Remove E-ring from upper pivot axle at Tilt-motor rod-joint end.
4. Slide the upper pivot axle out of Tilt-motor assembly.
5. Remove E-ring (shoulder screw on older bases) at base of Tilt-motor and remove Tilt-motor.

9.5 Foot-end Cover
See Foot-end Pivot Assembly Drawing

1. Turn Power-switch to "OFF", disconnect Power Cord from power source (AC outlet), allow 30 seconds for discharge.
2. Remove the foot-end cover screws.
3. Carefully lift foot-end cover up and off.

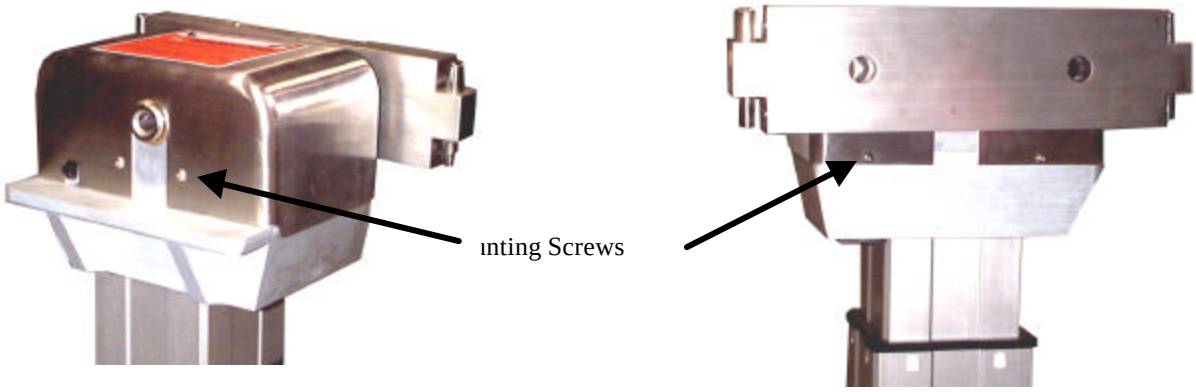

Figure 13: Foot-end Pivot Assembly Cover Removal

9.6 Foot-end Pivot Assembly
See Foot-end Pivot Assembly Drawing.

1. Confirm Rotation Safety Lock Brake is off:
   a. Turn Rotation Safety Lock switch (at head-end) to "OFF".
   b. Turn Power-switch to "OFF", disconnect Power Cord from power source (AC outlet), allow 30 seconds discharge.
   c. Remove foot-end base-cover.
   d. Disconnect brake-motor wire from wire harness.
2. Remove three (3) socket-head back plate screws using 3/16-inch hex key; slide back plate off end of crossbar.
3. Remove four (4) 6mm socket-head screws attaching pivot assembly to top of column, in a square pattern, using 5mm "ball end" hex driver, minimum 4-1/2 –inches long.
4. Lift off pivot assembly.
5. Install in reverse order.

9.6 Foot-end Cross Bar
See Foot-end Pivot Assembly Drawing.

1. Confirm Rotation Safety Lock Brake is off:
   a. Turn Rotation Safety Lock switch (at head-end) to "OFF".
   b. Turn Power-switch to "OFF", disconnect Power Cord from power source (AC outlet), allow 30 seconds discharge.
   c. Remove foot-end base-cover; disconnect battery.
2. Remove foot-end cover per procedure.
3. Remove three (3) socket-head back plate screws using 3/16-inch hex key.
4. Remove front plate screws.
5. Remove traction arc sensor screws and move sensor clear.
6. Remove grip ring from pivot arm pin; remove pin.
7. Remove back plate sensors screws.

8. Remove Crossbar with front and back plates by lifting out.
9. Loosen setscrews on both collars.
10. Slide rear plate and rear collar off Crossbar.
11. Remove setscrews from drum
12. Slide drum, clamp, rear collar, and front plate off Crossbar.
13. Install in reverse order; Adjust Rotation Safety Lock.

9.7 Foot-end Rotation Safety Lock Motor

See Foot-end Pivot Assembly Drawing.

1. Remove Crossbar with front and back plates per above.
2. Remove Lock-motor to brake pivot-arm shoulder screw.
3. Remove two screws holding the clevis plate to the outside of the foot end housing.
4. Lower Lock-motor and clevis plate through foot-end housing, exposing the retainer pin.
5. Slide out retainer pin; remove Lock-motor from foot-end housing and clevis plate.
6. Install in reverse order; Adjust Rotation Safety Lock.

9.8 Foot-end Rotation Safety Lock Clamp

See Foot-end Pivot Assembly Drawing.

1. Remove Foot-end Cover as described above.
2. Remove three ¼-20 socket-head Bearing Plate screws; slide off Crossbar shaft.
3. Remove Brake Band.
4. Remove rear pivot arm.
5. Remove clamp retaining ring.
6. Install in the reverse order.

9.9 Head or Foot-end Columns

See 5892 Base Assembly Drawing.

1. Remove head or foot-end pivot assembly per procedure.
2. Remove power-cord storage bracket from head-end column.
3. Unplug 5-pin, 120VAC power connector from Column.
   Note: Connector is held by molded-on retaining clip.
4. Remove four 5mm socket-head Column mounting screws from bottom of column.
5. Lift Column out of base.
6. Install in the reverse order.

9.10 Center Beam, Retractable

See 5892 Base Assembly Drawing and 5892 Interconnect Diagram.

1. Remove head and foot-end columns per procedure.
2. Remove H-frame and T-pin storage brackets from each column.
3. Flip base upside down.
4. Foot-end:
   4.1. Unplug black, 5-pin, 120VAC power-connector P19 from foot-end column.
   Note: Connector is held by molded-on retaining clip.
   4.2. Unplug white, 5-pin connector P19 from cable to foot-end pivot assembly.
   4.3. Disconnect brown wire with female spade-connector from negative terminal of 4 VAC battery.
   4.4. Disconnect green wire with male spade-connector from positive terminal of 12 VDC Batteries

5. Head-end:
   5.1. Unplug black, 5-pin, 120VAC power-connector P3 from Control PCB header J3.
   5.2. Unplug 6-pin connector P1 from Control PCB header J1.
   5.3. Unplug 5-pin connector P8 from Control PCB header J8.
   5.4. Extract pin four from P7 (green wire to Control PCB header J7) using Molex pin extraction tool (p/n 11-03-0044).
6. Remove four (4) ¼-20 socket-head screws attaching beam to head and foot-end bases.
7. Remove the center beam.
8. Install replacement in the reverse order.

9.11 Casters

To remove Caster, remove screw located on the outside of the Casting.

9.12 Hand Control

1. Switch Power-switch to "OFF", disconnect Power Cord from power source (AC outlet), allow 30 seconds for discharge.
2. Tilt table on its side with power switch toward the floor. Locking the casters eases tilting. Protect pivot assemblies from damage by supporting columns with jack-stands.
3. Remove bottom covers at Head-end using 3/32-inch hex key. Note the orientation of the cover and wire routing for replacement.
4. Unplug Hand Control cable-connector from Control PCB, J4.
   Note: This is the only "D" connector and the only horizontally oriented connector on the Control PCB.
5. Carefully pull the Hand Control cable laterally, toward the Head-end column, NOT upward.
6. Remove the cable clamp by removing the ¼-20 bolt.
7. Hand Control and cable are free to remove.
8. Install in reverse order.

9.13 Batteries

See Figure 14.

WARNING:

Improperly installed batteries can leak, causing equipment damage or injury. See photo below to assure correct installation of replacement batteries.

AVERTISSANT:

Les piles incorrectement installées peuvent fuir, les dommages d'équipement causant ou la blessure. Voir que la photo assure l'installation exacte de piles de remplacement.

- **Rechargeable lead-acid batteries contain toxic materials. Batteries should be fully discharged prior to handling, or the terminals should be isolated to prevent accidental discharge.**

- **Batteries contain sulfuric acid. In the event of a leak in the battery or fire, dilute spilled fluid with water. In case of skin contact, wash areas with water. In the event of eye contact, flush eyes with water for 15 minutes and consult a physician immediately.**

- **Batteries should only be replaced with OSI approved parts. Contact OSI to obtain correct replacement batteries.**

- **Incorrectly connected batteries can cause damage to equipment or injury. Bridging (shorting) of battery terminals can cause explosion of the battery or fire.**

- **Do not attempt to connect AC power to the 5892 Base until correct battery connection is confirmed.**

- **Always dispose of batteries properly. Do not incinerate batteries. Do not place rechargeable 12V batteries into a metal trashcan, toolbox, drawer or parts bin.**

- **Always take the following precautions when removing the battery compartment covers:**
  1. Remove metal jewelry and wristwatches when in proximity to batteries.
  2. Always cover at least one terminal of each battery with insulating material if connectors are removed.
  3. Use caution with employing metal tools in proximity to batteries. Metal tools create circuit bridges (electrical shorts) upon contact. When possible, use tools with insulated handles and ends.
  4. Never place anything on top of batteries, whether batteries are mounted or removed from product.

Battery Type: Gel-cell LED acid batteries

- 12 Volt, 5 Amp-hour rating (two required)
- 4 Volt, 5 Amp-hour rating (one required)
- Re-order Battery Replacement Kit 5892-170

Charging and Inspection:

See Section 6.4 Battery Recharging.

To Test Existing Batteries:

1. Connect power cord to power source and turn main "On/Off" Power Switch to “ON”.
2. Locate the "Rotation Safety Lock" lighted switch.
3. Using a stopwatch, prepare to measure the time for the table power-off sequence.
4. Turn main "ON/OFF" Power Switch “OFF” and observe, in seconds, the time that the "Rotation Safety Lock" lighted switch remains illuminated. If this lighted switch remains illuminated for less than 20 seconds, replace batteries as described below.

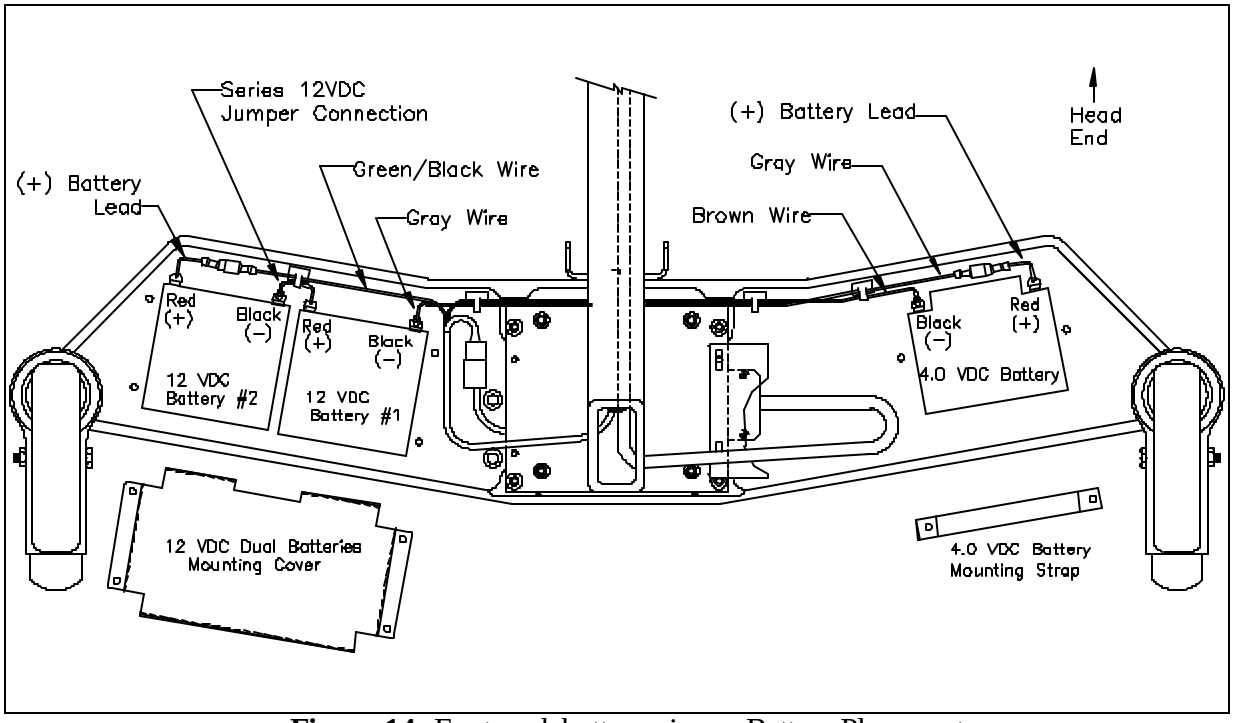

Figure 14: Foot-end, bottom view – Battery Placement

Battery Removal:

1. Turn Power-switch to “OFF”, disconnect the Power Cord from power source (AC outlet), allow 30 seconds for discharge.
2. Tilt table on its side with power switch toward the floor. Locking the casters eases tilting. Protect pivot assemblies from damage by supporting columns with jack-stands.
3. Remove bottom covers at Foot-end using 3/32-inch hex key. Note the orientation of the covers and wire routing for replacement.
4. Disconnect brown wire from the 4.0VDC battery, black (-) terminal.
5. Disconnect gray wire from the 4.0VDC battery, red (+) battery lead.
6. Remove 4.0VDC battery by removing the two screws using 3/32-inch hex key and carefully remove the battery and mounting strap.
7. Disconnect gray wire from 12VDC battery #1 black (-) terminal.
8. Disconnect gray wire from 12VDC battery #2 red (+) battery lead.
   Do not disconnect the jumper connection between battery #1 and battery #2.
9. Remove the two 12DVC batteries by removing the mounting cover held with four screws (into threaded standoffs). Remove the screws using 3/32-inch hex key and remove the cover, then both batteries carefully. Use care to not damage the jumper connection between the batteries.

Battery Installation:

1. Turn Power-switch to "OFF", disconnect Power Cord from power source (AC outlet), allow 30 seconds for discharge. Tilt base on side and remove foot-end base covers. When tilting base on its side, use a support or block to keep Head and Foot End assembly from touching the floor.
2. Connect the 12VDC battery jumper-connection by connecting the 12VDC battery #2 red (+) battery lead to the 12VDC battery #1 black (-) terminal.
3. Carefully install the two 12VDC batteries, with the jumper connection attached, and rest the batteries into the base casting recessed area. The batteries must be held in place while attaching the mounting cover. ***Important:*** The 12VDC battery mounting cover has a "notched" side for clearance around the jumper connection between the two 12VDC batteries. Make sure the notch is properly oriented to avoid contact with the battery terminals.
4. Attach the 12VDC batteries' mounting cover with four mounting screws using 3/32-inch hex key.
5. Position the 4.0VDC battery and install the mounting strap over the 4.0VDC battery. Attach the mounting strap with two screws using 3/32-inch hex key.
6. Connect the gray wire to the 4.0VDC battery, red (+) battery lead.
   Temporarily leave the brown wire unattached.
7. Connect the gray wire to the 12VDC battery #1, black (-) terminal.
   Temporarily leave the green/black wire unattached.
8. Using a DC voltmeter, measure the voltage between 12VDC battery #2, red (+) battery lead and the 4.0VDC battery, black (-) terminal. The voltage measured should be 28VDC or greater. If not, recheck wiring and check voltage again. If unable to measure 28VDC or greater, call OSI Technical Service.
9. Upon successful voltage measurement, connect the green/black wire to 12VDC battery #2, red (+) battery lead.
10. Connect the brown wire to the 4.0VDC battery, black (-) terminal.
11. Route and secure wires to prevent damage.
12. Attach base covers at foot-end using 3/32-inch hex key.
13. Upright 5892 Base.

9.14 Power Supply

See Figure 15.

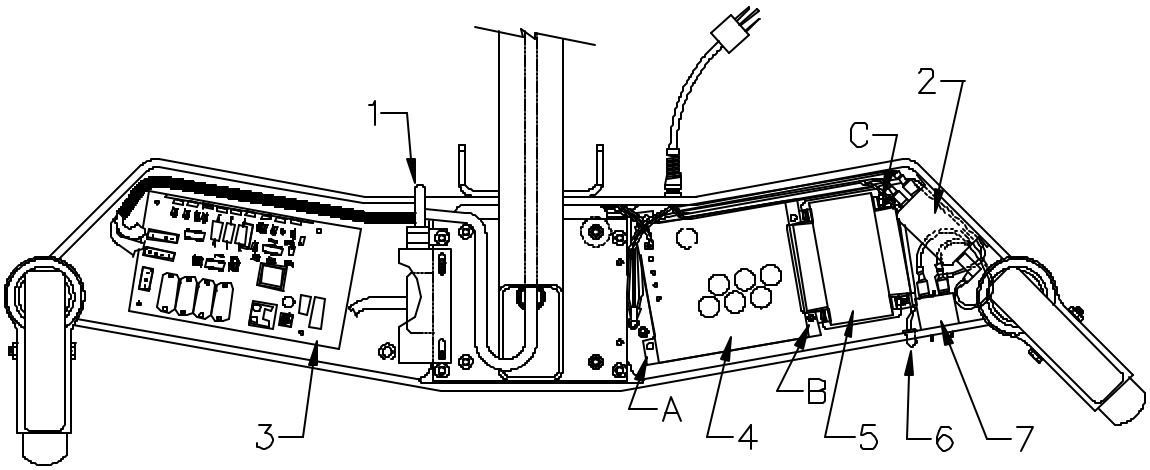

Figure 15: Head-end, bottom view – Power Supply and Control PCB Replacement

1) Hand Control cable.
2) Core-Com Filter
3) Control PCB
4) Power Supply - PCB
5) Power Supply – Transformer
6) "Battery Fault" Light
7) ON/OF Power Switch/Circuit Breaker

Power Supply Removal:

1. Turn Power-switch to "OFF", disconnect the Power Cord from power source (AC outlet), allow 30 seconds for discharge.
2. Tilt table on its side with power switch toward the floor. Locking the casters eases tilting. Protect pivot assemblies from damage by supporting columns with jack-stands.
3. Remove bottom covers at foot-end using 3/32-inch hex key. Note the orientation of the covers and wire routing for replacement.
4. Disconnect three ground wires by removing the socket screw using a 5/32-inch hex key.
5. Disconnect AC Power Cable by unplugging the three-pin connector at J6 on the Controller PCB.
6. Disconnect DC Power Cable.
   6.1. Unplug the four-pin connector at J7 on the Controller PCB.
   6.2. Using extraction tool, carefully remove pin four, (attached to the small-gauge green/black wire from the batteries). Mark pin four with permanent marker pen for reinsertion identification.
   6.3. Carefully remove the small-gauge green/black wire from the spiral sheath and immediately wrap with electrical tape to prevent grounding.
7. Gently pull and guide the AC and DC power cables from the base casting.
8. At each corner of the Power Supply PCB, remove the two socket-head screws (items A shown above) and the two socket-head screws (items B shown above) securing the unattached transformer, using a 9/64-inch hex key.
9. Remove Core-Com Filter (item 2) using 3/32-inch hex key and 11/32-inch open-end wrench. Best access is by removing ground connector.
10. Remove the two remaining socket-head screws (items C shown above) securing the transformer using a 9/64-inch hex key. The power supply PCB/transformer assembly will need to be held from moving while unplugging the black wire and white wires connected to the circuit breaker.
11. Lift out the power supply assembly.

Power Supply Installation:

1. Turn Power-switch to "OFF", disconnect Power Cord from power source (AC outlet), allow 30 seconds for discharge. Tilt base on side and remove foot-end base covers.
2. Plug the black wire and white wire to the circuit breaker (item 7).
3. It is recommended to perform a current leakage test.
4. Install the Power Supply transformer (item 5); replace mounting screws as needed, do not tighten.

   Caution: Pinching or crushing of black and white AC wires under transformer can cause leakage current. If pinched wires are found, wrap with electrical tape. If crushed or broken wires are found, replace wire.
5. Wrap black and white AC wires with electrical tape to approximately 1/2 inch beyond edge of Power Supply PCB.

   NOTE: *Use care to route wires to the outside and being clear of the PCB-mounted transformers.*
6. Install the power supply PCB (item 4). Tighten four socket-head screws using 9/64-inch hex key. Replace as needed
7. Install Core-Com Filter (item 2) using 3/32-inch hex key and 11/32-inch open-end wrench.
8. Attach ground connector.
9. Guide both the AC and DC cables to the Controller PCB.
10. Plug the three-pin connector of AC cable into J6 on the Controller PCB.
11. Insert pin four (the small-gauge green/black wire from the batteries) into the four-pin connector of DC cable, insert wire into spiral sheath, and plug into J7 on the controller PCB.
12. Secure all loose wires and cables.
13. Install the base cover plate (not shown) by attaching four socket screws using a 3/32-inch hex key.

9.15 Controller Printed Circuit Board (Controller)

See Figure 15.

Controller Removal:

1. Turn Power-switch to "OFF", disconnect Power Cord from power source (AC outlet), allow 30 seconds for discharge.
2. Tilt table on its side with power switch toward the floor. Locking the casters eases tilting.

   Note: Protect pivot assemblies from damage by supporting columns with jack-stands.
3. Remove bottom covers at Foot-end using 3/32-inch hex key. Note the orientation of the covers and wire routing for replacement.

   Note: Use electro-static discharge (ESD) precautions when handling Controller.
4. Remove cables from Controller by unplugging the following:

   Note: Cable connectors are not marked, mark as needed using marker pen.

   4.1. P1, foot-end control cable from J1.
   4.2. P2, head-end control cable from J2.
   4.3. P3, foot-end column power connector from J3.
   4.4. P4, Hand Control cable from J4.
   4.5. P5, head-end column power connector from J5.
   4.6. P6, power supply AC cable from J6.
   4.7. P7, power supply DC cable from J7.
   4.8. P8, foot-end cable from J8.
   4.9. P9, head-end cable from J9, <u>note properly installed pin orientation</u>.
   4.10. P10, emergency brake release switch cable from J10.
   4.11. P11, Battery Status Light cable from J11.
5. Remove Controller PCB, mounted on one-inch long threaded-standoffs, by removing four socket-head screws using 1/16-inch hex key.
6. Carefully lift out Controller PCB.

Controller Installation:

1. Turn Power-switch to "OFF", disconnect Power Cord from power source (AC outlet), allow 30 seconds for discharge. Tilt base on side and remove foot-end base covers.
   NOTE: *Use Electro-Static Discharge (ESD) precautions when handling Controller PCB.*
2. Carefully install replacement Controller and attach to the stand-offs with four socket-head cap screws using 1/16-inch hex key.
3. Plug cable connectors onto Controller as follows:
   Caution: Use care to route cables clear of Control PCB heat sink(s). Use care to prevent any cables from binding, chafing, or other damage.
   3.1. P10, emergency-brake-release switch cable-connector into J10.
   3.2. P9, head-end cable-connector into J9.
   3.3. P8, foot-end cable-connector into J8.
   3.4. P7, power supply DC cable-connector into J7.
   3.5. P6, power supply AC cable connector into J6.
   3.6. P5, head-end column power connector into J5.
   3.7. P4, Hand-Control cable-connector into J4.
   3.8. P3, foot-end column power-connector into J3.
   3.9. P2, head-end control cable-connector into J2.
   3.10. P1, foot-end control cable-connector into J1.
4. Route all remaining cables and attach with small cable-ties as needed. Trim as needed.

9.16 On-Off Power Switch / Circuit Breaker

See Figure 15.

1. Turn Power-switch to "OFF", disconnect Power Cord from power source (AC outlet), allow 30 seconds for discharge.
2. Tilt table on its side with power switch toward the floor. Locking the casters eases tilting.
   Note: *Protect pivot assemblies from damage by supporting columns with jack-stands.*
3. Remove bottom covers at Head-end using 3/32-inch hex key. Note the orientation of the covers and wire routing for replacement.
4. Disconnect the four connectors from the Switch / Circuit Breaker.
   Note: *Mark as needed for re-installation.*
5. Remove the four 10-32 flat-head socket screws from the Switch / Circuit Breaker mounting plate.
6. Remove the Switch / Circuit Breaker.
7. Install in reverse order.

10.0 ADJUSTMENT of COMPONENTS

HEAD END

See Head-end Pivot Assembly Drawing.

10.1 Tilt Actuator Rod-end Length

1. Turn Power-switch to “OFF”, disconnect Power Cord from power source (AC outlet), allow 30 seconds for discharge.
1. Remove head-end Pivot Assembly Cover per procedure.
2. Loosen Tilt Actuator rod-end lock nut.
3. Rotate Tilt Actuator rod until six threads are showing on rod end.
4. Tighten lock nut.
5. Disconnect the Tilt Actuator from the Base wiring and connect an external power controller to the Actuator.
6. Drive the tilt mechanism all the way right (Actuator extended). Watch for clearance between the Actuator rod and the Pillow Block at the end of Actuator travel.
7. If the actuator rod touches the Pillow Block, re-loosen the locknut and turn the Actuator rod as many turns as necessary to ensure clearance. Retighten the rod end.
8. Once complete, disconnect the tilt actuator from the external controller and connect to the base wiring.

10.2 180 Degree Rotation Lock Sensor

1. Connect Power Cord to power source (AC outlet); turn Power-switch to “ON”.
2. Rotate head-end pivot assembly to center using Hand Control.
3. Switch Power-switch to “OFF”, disconnect Power Cord from power source (AC outlet), allow 30 seconds for discharge.
4. Remove head-end Pivot Assembly cover per procedure; do not unplug electrical connector, hang cover on table-base power-cord storage bracket.

   Caution: AC, DC voltage exposed and motor-activated moving parts, work with care.

1. Unscrew "180 Degree Rotation Lock" handle (blue).
2. Loosen "180 Degree Rotation Lock" (micro-switch) mounting bracket by loosening 8-32 button-head screw using 3/32 hex key.
3. Tighten "180 Degree Rotation Lock" handle until Rotating Crossbar resists 95 ft/lbs of rotational force, in both directions, using torque wrench and test bar. Tighten handle additional 45 degrees.
4. Adjust micro-switch bracket until micro-switch trips open; tighten 8-32 button-head screw.
5. Connect Power Cord to power source and turn Power-switch “ON”; "180 Degree Rotation Lock” indicator illuminates blue.
6. Unscrew "180 Degree Rotation Lock" handle just until "180 Degree Rotation Lock” indicator light goes out.
7. Tighten "180 Degree Rotation Lock" handle until "180 Degree Rotation Lock” indicator light illuminates.
8. Re-test Rotating Crossbar resists 95 ft/lbs of rotational force in both directions using torque wrench and test bar (P/N T5890-21-23).
9. If test fails, repeat adjustment procedure.
10. If test passes continue.
11. Turn Power-switch to “OFF”, disconnect Power Cord from power source (AC outlet), allow 30 seconds for discharge.
12. Install head-end Pivot Assembly Cover per procedure.

10.3 Tilt Home & Tilt Left/Right Sensors

1. Connect Power Cord to power source (AC outlet); turn Power-switch to "ON".
   Caution: AC, DC voltage exposed and motor-activated moving parts, work with care.
2. Tighten 180 Degree Rotation Lock handle; verify indicator light illuminates blue.
3. Drive tilt mechanism right using Hand Control "Right Lateral Tilt" button.
   3.1. Loosen 6-32 socket-head screw beneath Left/Right Sensor bracket; move bracket closer to pillow block until Left/Right Sensor-switch clicks.
4. Drive tilt mechanism left using Hand Control "Left Lateral Tilt" button; stop when Tilt Home Sensor clicks, indicator light illuminates to confirm tilt drive is home (rotating Crossbar is level).
   4.1. Tighten 6-32 socket-head Left/Right Sensor bracket screw.
5. Drive tilt mechanism right using Hand Control "Right Lateral Tilt" button for about three seconds.
6. Loosen 180 Degree Rotation Lock handle; verify tilt mechanism drives to center and stops.
   6.1. If it drives towards center but stops at true level, Sensor Switch is too close to pillow block. Tighten 180-degree Rotation Lock handle. Loosen sensor-bracket adjustment-screw, move bracket slightly away from pillow block. Re-tighten sensor-bracket adjustment-screw. Repeat step to verify adjustment.
   6.2. If it drives to center but does not stop, continuing past level or rocking back and forth, Sensor Switch is too far from pillow block. Loosen sensor-bracket adjustment-screw, move bracket toward pillow block. Re-tighten sensor-bracket adjustment-screw. Repeat step to verify adjustment.
   6.3. If it does not drive at all when the 180-degree Rotation Lock handle is loosened, an electronic fault exists in the Base. Check wiring to head-end, if fault continues replace Control PCB.

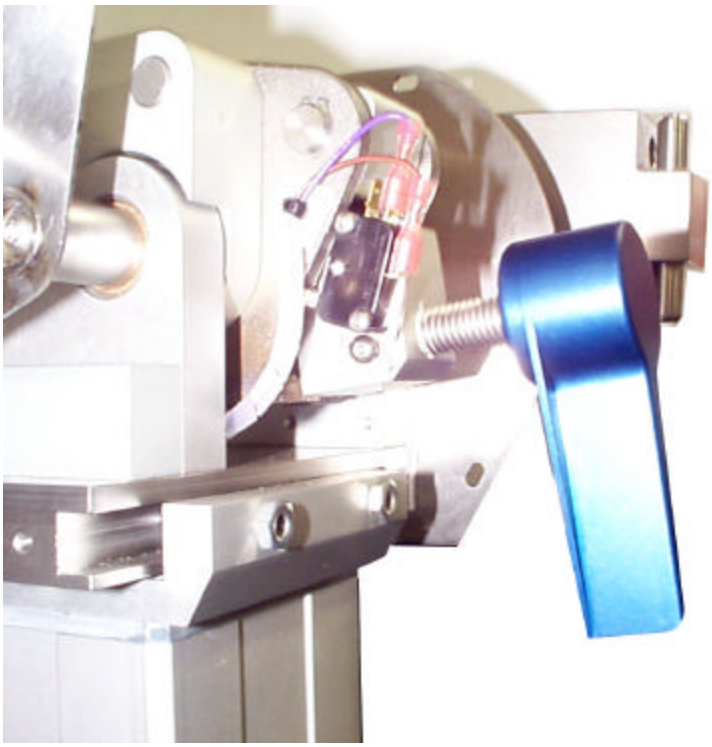

Figure 16: 180-degree Rotation Lock Indicator Light limit switch and Lock Handle.

FOOT END

See Foot-end Pivot Assembly Drawing.

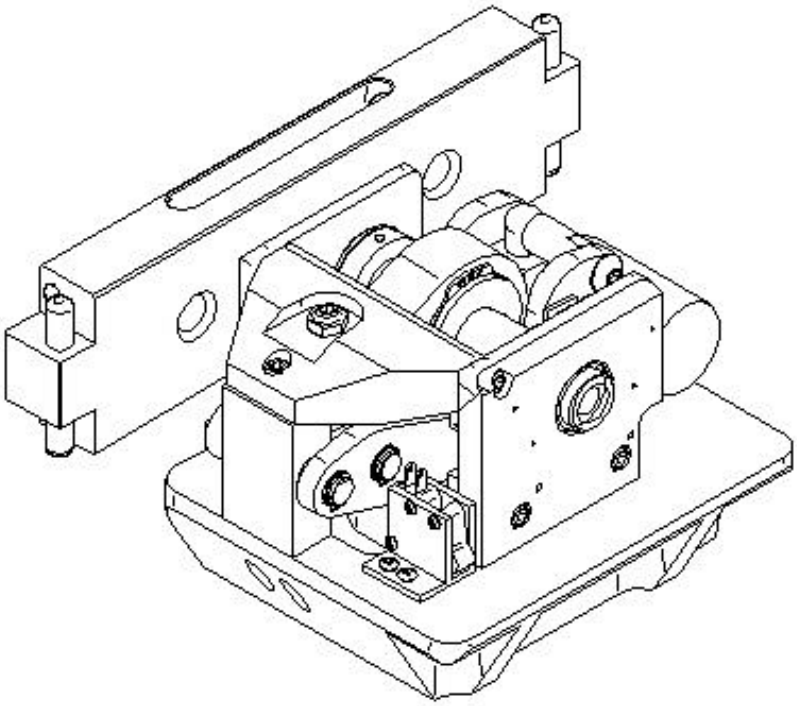

Figure 17: Foot End Assembly

10.4 Rotation Safety Lock

NOTE: *As Safety Lock wears; adjustment may be required to achieve complete locking.*

2. Turn Power-switch to "OFF", disconnect Power Cord from power source (AC outlet), allow 30 seconds for discharge.
3. Remove foot-end Pivot Assembly Cover per procedure.
4. Connect Power Cord to AC outlet; turn Power-switch to "ON".
   Caution: 28VDC voltage exposed and motor-activated moving parts, work with care.
5. Turn Rotation Safety Lock "ON" (located on head-end);
   a. Crossbar should resist 95 foot-pounds, in both directions, using torque wrench and Rotation Test Bar (p/n T5890-21-23). If not, loosen brake-clamp lock-nut using 9/16-inch box or socket wrench, turn adjustment setscrew using 3/16-inch hex key, re-tighten lock-nut. Verify by turning Rotation Safety Lock switch "off", then "on" again; recheck adjustments.
   b. The Rotation Safety Lock "ON" micro-switch should engage, adjust as needed. Verify by turning Rotation Safety Lock switch off, then on again; recheck adjustments.
6. Turn Rotation Safety Lock "OFF", crossbar should rotate freely and Rotation Safety Lock "OFF" micro-switch should engage. If not, adjust as needed. Verify by turning Rotation Safety Lock switch on, then off again; recheck adjustments.
7. Turn Power-switch to "OFF", disconnect Power Cord from power source (AC outlet), allow 30 seconds for discharge.
8. Replace foot-end cover per procedure.

11.0 TECHNICAL DRAWINGS and PARTS LISTS

11.1 Top-level Assembly Drawing and Bill of Materials
See attached drawing number 5892 at end of this manual.

11.2 Head-end Pivot Assembly Drawing
See attached drawing number 5892-1 at end of this manual.

11.3 Foot-end Pivot Assembly Drawing
See attached drawing number 5892-2 at end of this manual.

11.4 Interconnect Wiring Diagram
See attached drawing number 5892-125 at end of this manual.

11.5 Replacement / Spare Parts List

1. Power Supply……..……..….(part number) 5892-136 (was 5892-120)
2. Control PCB……..……....……..……5892-150 (was 5892-5)
3. Telescopic I-Beam Assembly……..……..……5892-180
4. Hand Control……..……...…….5892-150
5. Circuit Breaker……..……..……. NV0387
6. Power Cord……..……..…….. NV0584
7. Battery, Rechargeable, 12V, 5A (2x required)……5892-122
8. Battery, Rechargeable, 4V, 5A (1x required)..……5892-121
9. Rotation Test Bar……..……T5890-21-23

12.0 GLOSSARY of TERMS

Basic assumptions of Patient Orientation on the tabletop:
Our glossary of terms and technical procedures assume the patient is oriented with their head at the “front or head-end of table” and their feet at the “rear or foot-end of table”. The hand control functions are oriented for this position only.

“**Front of table**” indicates the end of the table where the power cord, "On-Off" switch, and Control Panel are located; otherwise referred to as the “head end”.

“**Rear of table**” indicates the opposite end of the table also referred to the “foot end".

“**Pedestal**” refers to one of two main column structures that support the tabletop.

“**Left side of the table**” refers to the table as you stand at the rear of table.

“**Right side of the table** refers to the table as you stand at the rear of table.

“**Raise the table**” refers to raising the height of the table.

“**Lower the table**” refers to lowering the height of the table.

“**Level the Table**” refers to leveling the tabletop regardless of height.

“Hospital Grade" outlet refers to a 120VAC outlet properly wired with earth ground: Neutral to Common = 120VAC; Neutral to Ground = 120VAC; Common to Ground less than zero point five (0.5) VAC.

“Table Home” refers to the tabletop being laterally level, no tilt left or right.

13.0 OSI TECHNICAL SERVICE

13.1 Contact for Parts and Service

For detailed repair information or to order replacement parts, call the OSI Technical Services Department:
1-800-777-4674

A Technical Services line is available from 7AM-5PM PST, Monday through Friday. Please leave a message after business hours.
Please state *slowly* your name, phone number, your facility name and city, and affected equipment model number.

An e-mail message may be left anytime at techsvcs@osisosi.com or through the Technical Service icon in our web site: www.osiosi.com.

13.2 To order Replacement Parts (RP)

1. If unable to identify part - telephone, fax or E-mail to Technical Service.
2. If part is known - telephone, fax or E-mail part number and description to Customer Service for price and availability.
3. To place Replacement Parts (RP) order - telephone, fax or E-mail part number, description, price, customer number and method of shipment to Customer Service with purchase order. Indicate that order is for Replacement Parts (RP).

13.3 To return damaged parts (RGA)

1. Identify parts to be returned.
2. Telephone, fax or E-mail part number and description of parts for return to Customer Service for Return Goods Authorization (RGA) number.
3. Return ship parts with RGA number clearly marked on outside of package.
4. Complete Certificate of Disinfected Parts Document #40204-17.

13.4 To send a part or item here for us to repair (RA)

1. If unable to identify part - call, fax or E-mail to Technical Service.
2. If part is known - telephone, fax or E-mail part number and description to Technical Service for Repair Authorization (RA) number.
3. Clean (disinfect) parts prior to shipping; complete Certificate of Disinfected Parts Document #40204-17.
4. Ship part with RA number clearly marked on outside of package.
5. Part will be evaluated and customer will be contacted with the cost of repair.
6. After customer approval of repair cost, part will be repaired and return shipped to customer.

End

ITEM	PART NO.	DESCRIPTION	QTY
65	5890–81	TABLETOP SUPPORT	1
64	5840–682	BRAKE PUCK	1
63	5892–96	BATTERY STRAP	1
62	5892–95	BATTERY COVER	1
61	NQ1538	1/16 EDGE TRIM	5"
60			
59	5890–100	COVER, BASE, POWER CABLE CONNECTOR	2
58			
57			
56			
55			
54			
53		(N)	
52			
51			
50	AAAP075HA	#8–32 X .75 SKT SET SCR	10
49	5892–500	PRINTED CIRCUIT BOARD (R)	1
48	5892–137	ASSY BATTERY FAULT LIGHT (R)	1
47	NC0312	3M BLACK TIE STRAP	28
46	NV0259	ELECTRICAL LOOP MOUNT	1
45	AE021050A	#10 FLAT WASHER	4
44			
43	AAM8025AAC	M8 X 1.25 X 25MM BUTTON HEAD SOCKET SCREW SS	4
42	NG0727	8–32 HEX STANDOFF F–F SST	3
41	5840–293	CORD BRKT	1
40	5892–150	HAND HELD PENDANT CONTROLLER	1
39			
38	5892–44	COVER, BASE	1
37	ADAPA	8–32 NUT	2
36			
35	5892–135	FRONT PLATE	1
34	AAAP037AAC	#8–32 X .37 SS BTH SKT SCR	3
33	AAAT062CA	#10–32 X .62 SCH CAP SCR	4
32	5890–42	HANDLE BRKT ASSY., WELDED	2
31	5840–659	QUIVER PAD	2
30	5840–656	QUIVER ASSY	2
29	AAAP025AAC	#8–32 X .25 SST BTH SKT SCR	23
28	AAAH031AAC	4–40 X .31 SST BTH SKT SCR	4
27	5892–35	RETAINER BLOCK, HEAD END TROLLEY	1
26	AJ0114	1 " RETAINING RING EXTERNAL	2
25			
24	5892–9	CABLE, AC, HEAD END	1
23	5892–132	STRAIN RELIEF, MODIFIED	1
22	5892–79	TRACTION PULLEY ASSY	1
21	5892–67	FOOT END COVER	1
20	5892–42	INSIDE PANEL, HEAD END COVER	1
19			
18	AAAW100CAC	1/4–20 X 1.0 SST SCH CAP SCR	10
17	5840–689	PUCK BACKING PLATE	1
16	5890–102	M6 X 1 X 24mm SCH CAP SCR (T)	16
15	5892–3	HARNESS, HEAD END CASTING	1
14			
13			
12	5892–127	COVER, FOOT END	1
11	AAAP062BAC	#8–32 X .75 BTH SKT SCR	6
10	5892–109	COVER, BASE, HEAD END	1
9	5892–1	HEAD END PIVOT ASSY	1
8	5892–2	FOOT END PIVOT ASSY	1
7	5890–28	MACHINING TABLE BASE FOOT	1
6	AAAW050CAC	1/4–20 X .50 SKT CAP SCREW SS	4
5	5892–10	HEAD END COVER ASSY	1
4	5892–4	COLUMN, MODIFIED	2
3	ND0420	5" SWIVEL CASTER W/STEER LOCK	1
2	ND0415	"TENTE" 5" SWIVEL CASTER	3
1	5890–27	MACHINING TABLE BASE HEAD	1

PARTS LIST

ITEM	PART NO.	DESCRIPTION	QTY
130	5890–120	RIGHT FOOT PAD, BASE	2
129	5890–121	LEFT FOOT PAD, BASE	2
128	NV0375	16 GA WIRE, GREEN W/YELLOW STRIPE	9"
127	NV0578	TERMINAL, RING, #10, 16–22AWG	1
126	NV0583	TERMINAL, RING, 3/8,16–14AWG PN 7113K94	1
125	NV0374	16/14 VINYL INSULATED TERMINAL	1
124	NP1549	EARTH GROUND LABEL	1
123			
122	NW0365	USER GUIDE	2
121	NV0530	CABLE TIE MOUNT, SNAP IN	1
120	AAAM025BAC	6–32 X .25 LG FH SKT SCR ST ST	3
119	5892–7	HEAD END WIRE HARNESS	1
118	NV0529	SPIRAL CUT TUBING, 1/4 DIA	3 FT
117	5892–6	FOOT END WIRE HARNESS	1
116	NV0528	FLEX GUARD WIRE LOOM	3 FT
115	5892–130	GROUND WIRE, HEAD END	1
114	AE018037EC	#10 EXTERNAL TOOTH WASHER SS	1
113	5892–110	WASHER, BAFFLE SUPPORT	2
112	5892–108	BAFFLE, HANDLE STUD	1
111			
110			
109			
108			
107			
106			
105	NW0352	MAINTENANCE MANUAL	2
104	NV0527	CONNECTOR, SPADE TONGUE	1
103	NV0542	CORCOM EMI FILTER	1
102	5892–136	POWER SUPPLY ASSY 120VAC	1
101	5892–128	CABLE, AC POWER	1
100			
99	NV0390	HOSPITAL GRADE PLUG	1
98	5892–129	WIRE, GROUND, AC	1
97	NV0380	POWER CORD, HOSPITAL GRADE	15
96	NV0381	12 AMP CKT BRKR, ROCKER SWITCH, LIGHTED	1
95	AAAT075HA	10–32 SET SCREW .75 LONG ST ST	1
94	NV0445	WIRE CLIP, ADHESIVE BACKED (S)	7
93	NV0531	CABLE TIE MOUNT, SCREW DOWN	3
92	NG0740	8–32 X 3.0 STANDOFF	1
91	NG0739	8–32 X 2–3/8 STANDOFF	3
90	NG0738	8–32 X 1–13/16 STANDOFF	4
89	NG0737	4–40 TO 6–32 M–M STANDOFF	4
88	NV0506	CONNECTOR, SPADE LUG	1
87	NG0719	1/4–20 POSI HEX PLUNGER	1
86	NA0100	.50 CAM FOLLOWER BEARING	6
85	ADATA	NUT 10–32 ST ST	1
84	5892–18	ASSY RESET BUTTON	1
83	5892–14	BATTERY WIRE	1
82	5892–122	BATTERY ASSY	2
81	5892–169	(U) BATTERY ASSEMBLY 4 VOLT	1
80	5892–112	COVER, HEAD END, POWER SUPPLY	1
79	NP1617	LABEL EMERGENCY POWER	1
78	NP1802	BATTERY FAULT LABEL	1
77	NP1615	MTS POWER TILT SERIAL LABEL 5892	1
76	NP1613	I–BASE CAT. # 5892 LABEL	1
75	NP1612	WARNING LABEL FOOT END	1
74	NP1611	WARNING LABEL (TILT DRIVE STATUS)	1
73	NP1610	WARNING LABEL (180° ROTATION LOCK)	1
72	NP1455	PATENT NO. LABEL	1
71			
70	NP1609	WARNING LABEL ROTATION SAFETY LOCK	1
69	NP1559	POWER CORD TAG	1
68	NP1560	ETL LISTED LABEL	1
67	5892–26	BASE PLATE, TROLLEY	1
66	NP1551	INFORMATION LABEL/MEDICAL TYPE BF EQUIPMENT (TYPE–B)	1

PARTS LIST

ITEM	PART NO.	DESCRIPTION	QTY
133	5892–180 (V)	TELESCOPIC BEAM ASSY	1
132	SA0137 (U)	NEOPRENE STRIP	3"
131	NP1664 (K)	BATTERY CHARGING ADVISORY LABEL	1

PARTS LIST

NOTES: UNLESS OTHERWISE SPECIFIED

1. CHECK WIRING PRIOR TO POWER UP USING THE FOLLOWING TEST LIST. (REFER TO INTERCONNECT DRAWING 5892–125).

5892 MTS BASE WIRING CHECKLIST

Test Location:

FROM	TO	CONTINUITY:
POWER CORD SILVER PRONG	CKT BREAKER WHITE WIRE (LINE SIDE, BOTTOM)	ALL THE TIME
POWER CORD GOLD PRONG	CKT BREAKER BLACK WIRE (LINE SIDE, BOTTOM)	ALL THE TIME
POWER CORD SILVER PRONG	POWER CORD GOLD PRONG	ONLY WHEN CKT BREAKER IS ON
POWER CORD MIDDLE PRONG	CASTORS	ALL THE TIME
	FOOT END COVER	ALL THE TIME
	HEAD END COVER	ALL THE TIME
	GOLD PRONG	NEVER
	SILVER PRONG	NEVER
	POWER SUPPLY MOUNT PLATE	ALL THE TIME
	TRANSISTOR Q1 MOUNT SCREWS	NEVER
	TRANSISTOR Q2 MOUNT SCREWS	NEVER
	TRANSISTOR Q3 MOUNT SCREWS	NEVER
CONTROLLER BOARD		
J1 PIN 1 (WHITE)	J1 PIN 2 (BROWN)	ALL THE TIME
J1 PIN 3 (PURPLE)	J1 PIN 6 (RED)	WHEN LOCK ON SENSE IS DEPRESSED
J1 PIN 4 (YELLOW)	J1 PIN 6 (RED)	WHEN LOCK OFF SENSE IS DEPRESSED
J1 PIN 5 (ORANGE)	J1 PIN 6 (RED)	WHEN ARC ON SENSE IS DEPRESSED
J8 PIN 1 (BLACK)	J1 PIN 6 (RED)	WHEN CROSSBAR IS TILTED LEFT
J8 PIN 2 (BLUE)	J1 PIN 6 (RED)	WHEN CROSSBAR IS TILTED RIGHT
J2 PIN 1 (RED)	J2 PIN 2 (BLUE)	ALL THE TIME
J2 PIN 3 (GREEN)	J2 PIN 6 (BROWN)	WHEN TILT LEFT SENSE IS NOT DEPRESSED
J2 PIN 4 (YELLOW)	J2 PIN 6 (BROWN)	WHEN HOME SENSE IS NOT DEPRESSED
J2 PIN 5 (WHITE)	J2 PIN 6 (BROWN)	WHEN ROTATION SAFETY LOCK IS OFF
J9 PIN 1 (ORANGE)	J2 PIN 6 (BROWN)	WHEN ROCKER SWITCH IS ON
J9 PIN 5 (GREY)	J2 PIN 6 (BROWN)	NEVER

(R) 2. CHECK BATTERY CONDITION BY ASSESSING VOLTAGE BETWEEN J7 PIN 3 (GR/BLK) AND J1 PIN 6 (RED). IT SHOULD BE 28. TO 28.3 VOLTS DC.

(R) 3.

4. ASSESS OPERATING CONDITION OF BASE BY PERFORMING THE FOLLOWING: (WITH BASE PLUGGED IN AND CIRCUIT BREAKER ON)

TURN ROTATION SAFETY LOCK ROCKER SWITCH OFF.
FOOT END CROSSBAR SHOULD ALLOW FREE ROTATION.

TURN ROTATION SAFETY LOCK ROCKER SWITCH ON.
FOOT END CROSSBAR SHOULD RESIST ROTATION UP TO 60 FT–LBS.

WITH ROTATION SAFETY LOCK ROCKER SWITCH OFF.

(R) PRESS TABLE UP BUTTON ON HAND CONTROLLER (TOP LEFT BUTTON). BOTH COLUMNS SHOULD MOVE UP. RELEASE OF BUTTON SHOULD CAUSE IMMEDIATE STOP OF MOTION.

PRESS TABLE DOWN BUTTON ON HAND CONTROLLER (TOP RIGHT BUTTON). BOTH COLUMNS SHOULD MOVE DOWN. RELEASE OF BUTTON SHOULD CAUSE IMMEDIATE STOP OF THE MOTION.

PRESS TRENDELENBERG BUTTON ON HAND CONTROLLER (MIDDLE ROW LEFT BUTTON). FOOT COLUMN SHOULD MOVE UP AND HEAD COLUMN SHOULD MOVE DOWN. RELEASE OF BUTTON SHOULD CAUSE IMMEDIATE STOP OF MOTION.

PRESS REVERSE TRENDELENBERG BUTTON ON HAND CONTROLLER (MIDDLE ROW RIGHT BUTTON). FOOT COLUMN SHOULD MOVE DOWN AND HEAD COLUMN SHOULD MOVE UP. RELEASE OF BUTTON SHOULD CAUSE IMMEDIATE STOP OF MOTION.

PRESS TILT LEFT BUTTON ON HAND CONTROLLER (BOTTOM LEFT BUTTON). HEAD END CROSSBAR SHOULD TILT COUNTERCLOCKWISE (AS VIEWED FROM HEAD END OF BASE). RELEASE OF BUTTON SHOULD CAUSE IMMEDIATE STOP OF MOTION.

PRESS TILT RIGHT BUTTON ON HAND CONTROLLER (BOTTOM RIGHT BUTTON). HEAD END CROSSBAR SHOULD TILT CLOCKWISE (AS VIEWED FROM HEAD END OF BASE). RELEASE OF BUTTON SHOULD CAUSE IMMEDIATE STOP OF MOTION. –(CONT'D)–

WITH ROTATION SAFETY LOCK ROCKER SWITCH ON

PRESS TILT LEFT BUTTON ON HAND CONTROLLER. HEAD END CROSSBAR SHOULD TILT COUNTERCLOCKWISE AFTER A ONE TO TWO SECOND DELAY. FOOT END CROSSBAR SHOULD ALLOW FREE ROTATION. RELEASE OF BUTTON SHOULD CAUSE IMMEDIATE STOP OF MOTION. FOOT END CROSSBAR SHOULD AGAIN RESIST ROTATION.

PRESS TILT RIGHT BUTTON ON HAND CONTROLLER. HEAD END CROSSBAR SHOULD TILT CLOCKWISE AFTER A ONE TO TWO SECOND DELAY. FOOT END CROSSBAR SHOULD ALLOW FREE ROTATION. RELEASE OF BUTTON SHOULD CAUSE IMMEDIATE STOP OF MOTION. FOOT END CROSSBAR SHOULD AGAIN RESIST ROTATION.

PRESS TRACTION ARC SWITCH ON FOOT END COVER. PRESS TILT LEFT BUTTON. HEAD END CROSSBAR SHOULD NOT TILT AND FOOT END CROSSBAR SHOULD RESIST ROTATION.

WITH TRACTION ARC SWITCH STILL DEPRESSED, PRESS TILT LEFT BUTTON. HEAD END CROSSBAR SHOULD NOT TILT AND FOOT END CROSSBAR SHOULD RESIST ROTATION.

WITH ROTATION SAFETY LOCK ROCKER SWITCH OFF

FOOT END CROSSBAR SHOULD ALLOW FREE ROTATION. ROTATE FOOT END CROSSBAR 45 DEGREES COUNTERCLOCKWISE (AS VIEWED FROM HEAD END OF BASE). PRESS TILT LEFT BUTTON. HEAD END CROSSBAR SHOULD NOT TILT. PRESS TILT RIGHT BUTTON. HEAD END CROSSBAR SHOULD NOT TILT.

ROTATE FOOT END CROSSBAR BACK TO LEVEL. PRESS TILT LEFT BUTTON. HEAD END CROSSBAR SHOULD TILT COUNTERCLOCKWISE. PRESS TILT RIGHT BUTTON. HEAD END CROSSBAR SHOULD TILT CLOCKWISE.

ROTATE HEAD END CROSSBAR 15 TO 20 DEGREES COUNTERCLOCKWISE USING TILT LEFT BUTTON. LOOSEN 180 DEGREE ROTATION LOCK HANDLE. INDICATOR LIGHT SHOULD GO OFF. HEAD END CROSSBAR SHOULD TILT CLOCKWISE UNTIL LEVEL AND TILT HOME INDICATOR LIGHT COMES ON. RETIGHTEN 180 DEGREE ROTATION LOCK HANDLE.

ROTATE HEAD END CROSSBAR 15 TO 20 DEGREES CLOCKWISE USING TILT RIGHT BUTTON. LOOSEN 180 DEGREE ROTATION LOCK HANDLE. INDICATOR LIGHT SHOULD GO OFF. HEAD END CROSSBAR SHOULD TILT COUNTERCLOCKWISE UNTIL LEVEL AND TILT HOME INDICATOR LIGHT COMES ON. RETIGHTEN 180 DEGREE ROTATION LOCK HANDLE.

TURN BASE POWER SWITCH OFF. TILT HOME AND 180 DEGREE ROTATION LOCK INDICATOR LIGHTS SHOULD REMAIN ON. AFTER A ONE TO TWO SECOND DELAY, ROTATION SAFETY LOCK INDICATOR LIGHT SHOULD COME ON FOOT END CROSSBAR SHOULD RESIST ROTATION. 20–30 SECONDS LATER, ALL INDICATOR LIGHTS SHOULD TURN OFF.

PUSH AND HOLD EMERGENCY POWER BUTTON. TILT HOME AND 180 DEGREE ROTATION LOCK INDICATOR LIGHTS SHOULD COME ON. FOOT END CROSSBAR SHOULD ROTATE FREELY. ROTATION SAFETY LOCK INDICATOR LIGHT SHOULD REMAIN OFF.

RELEASE EMERGENCY POWER BUTTON. AFTER A ONE TO TWO SECOND DELAY, ROTATION SAFETY LOCK INDICATOR LIGHT SHOULD COME ON. FOOT END CROSSBAR SHOULD RESIST ROTATION. 5–10 SECONDS LATER, ALL INDICATOR LIGHTS SHOULD TURN OFF.

REVISIONS

REV	ZONE	DESCRIPTION	DATE	DWN	APP
F	C–8 A–9 D–2 B–3	CHG ITEM 40, WAS FE00365 (ECN 00285) DELETED ITEM 71, WAS NP1614 (ECN 00285) DELETED NOTE 3, SH 2 (ECN 00287) ADDED ITEM 124 NP1549 (ECN 00287)	11/28/00	KM	AY
G	A–5	CHG ITEM 96 TO 12 AMP P/N NV0381 WAS 10 AMP P/N NV0311 (SHT. 1) (ECN 01059)	2–1–01	JHG	SH
H	B–2	ADDED ITEMS 125, 126, 127, 128 (ECN 01118)	4/3/01	KM	SH
J	B–2 D–2 C7,8 C–2	SH 1, ADDED ITEMS 129 AND 130 (ECN 01201) SH 2, ADDED NOTE 8 SH 2, ADDED ITEMS 129 & 130 CALLOUTS SH 3, ADDED ITEMS 129 & 130 CALLOUTS	6/13/01	KM	SH
K	B–2	ADDED ITEM 131 PN NP1664 (ECN 02044)	1–18–02	JHG	SH
L	D–7 D–5	CHG SHT 4 GREEN /BLACK WIRE WAS 8" & GREEN/BLACK WIRE WAS 10" (ECN 02102)	03–01–02	JHG	SH
M	C7 D2	SH 1, CHG QTY OF ITEM 47 WAS 22. SH 4, CHG DIM WAS 8.0 (ECN 01268).	8/7/01	KM	SH
N	VAR	ITEM 53 WAS AJ0100 (ECN 02136).	5/2/02	PLB	SH
P	C–7	SHT. 1; CHG. QTY. OF ITEM 113 TO 2 WAS 1 (ECN 02254)	05–31–02	JHG	SH
R	D8 D8 A7 C7 B5 B5	CHG ITEM 49 WAS 5892–5 (ECN 02296) CHG ITEM 48 WAS 5892–119 CHG ITEM 78 WAS NP1616 CHG ITEM 102 WAS 5892–120 CHG NOTE 2 WAS 28.3 TO 28.9 VOLTS DELETED NOTE 3	7/17/02	KM	SH
S	B8	ADDED NOTE 11 (ECN 02084)	12/09/02	DMH	SH
T	B8	REVISED ITEM 16 (ECN 03095)	2/19/03	DMH	SH
U	B7 A5	CHG ITEM 81 WAS 5892–121 (ECN 03271) ADDED ITEM 132 SA0137	6/9/03	KM	SH
V	VAR	DELETED ITEMS 13, 14, 19, 36, 39, 44, 51, 52, 53, 54, 55, 56, 57, 58, 60, 100, 106, 107, 108 109, 110, 111, 123. ADDED ITEM 133. CHANGED COLORS IN WIRING CHECKLIST (ECN 02378)	7/5/03	DMH	SH

JACKSON BASE LABEL #NP1499 PROCEDURE:	MPI 130
ELECTRICAL & FUNCTIONAL CHECKLIST FOR 5892	MPI 151
5892 TABLE BASE CHECKLIST:	MPI 150
ADDITIONAL SPECIFICATION OR DOCUMENTS REQUIRED:	YES

UNLESS OTHERWISE SPECIFIED: ALL DIMS IN INCHES INCLUDING CHEM. APPLIED/PLATED FINISH. REMOVE BURRS & SHARP EDGES. DO NOT SCALE DRAWING.

TOLERANCES: X=±.030 .XX=±.010 .XXX=±.005 .XXXX=±.0010 ANGLES ±1°

CONFIDENTIAL. THIS DOCUMENT SHALL NOT BE REPRODUCED, NOR SHALL THE INFORMATION CONTAINED HEREIN BE USED BY OR DISCLOSED TO OTHERS EXCEPT AS EXPRESSLY AUTHORIZED IN WRITING BY ORTHOPEDIC SYSTEMS INC.

APPROVALS		DATE
DRAWN BY: R. KLEIN	INIT: RK	8–21–99
ENGR: R. KLEIN	INIT: RK	8–21–99
CHKR:	INIT:	
MFG APPR.:	INIT:	
NEXT ASSY.:	ECN NO.: 00143	
SCALE: 1:5	SHEET 1 OF 4	

OSI
ORTHOPEDIC SYSTEMS, INC.
30031 AHERN AVE.
UNION CITY, CA. 94587
(510) 429–1500

MATERIAL: SEE PARTS LIST

TITLE: I–BASE ASSY RETRACTABLE

SIZE D | DWG NO.: 5892 | REV V

REVISIONS					
REV	ZONE	DESCRIPTION	DATE	DWN	APP
		SEE SHEET 1 OF 4 FOR CHANGES.			

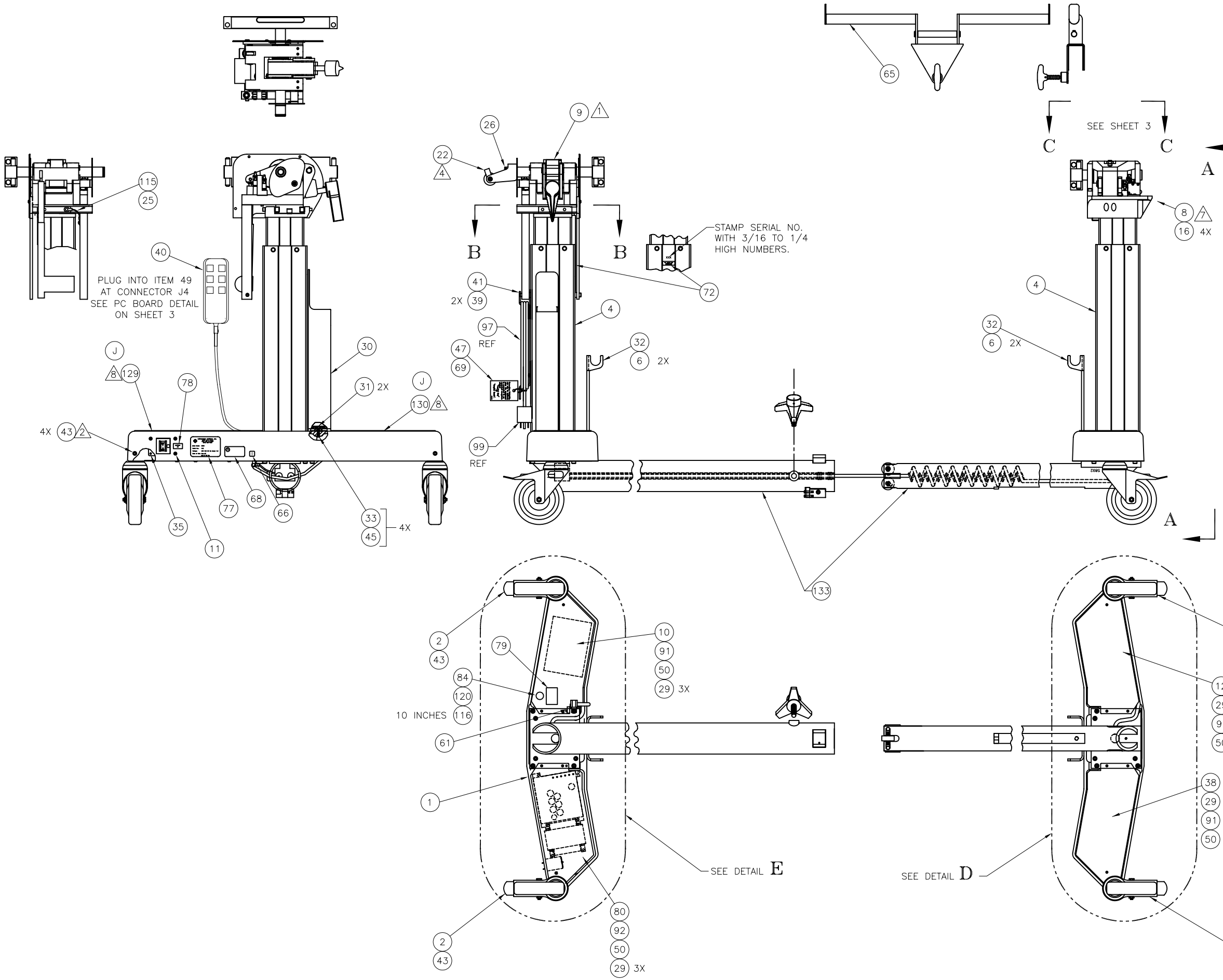

NOTES: UNLESS OTHERWISE SPECIFIED

1. ADJUST HEAD END TROLLEY RESISTANCE TO 20–25 POUNDS.
2. ASSEMBLE ITEM 43 (M8 X 1.25 SCREW) WITH BLUE LOCTITE #242 OR EQUIVALENT.
3. (F)
4. ITEM 5 COVER NOT SHOWN FOR CLARITY. ITEMS 22 AND 26 INSTALLED AFTER COVER FITTED.
5. REMOVE HANDLE TO ALLOW INSTALLATION OF ITEM 5 COVER. REPLACE HANDLE AFTER COVER FITTED.
6. HANDLE MUST BE REMOVED TO ALLOW INSTALLATION OF ITEMS 112 & 113. REPLACE HANDLE AFTER BAFFLE AND WASHER ARE IN PLACE.
7. ITEM 21 COVER NOT SHOWN FOR CLARITY. INSTALL COVER USING SCREWS ITEM 29, 4 PLACES.
8. (J) CLEAN ITEM 126 (5890–121) AND ITEM 127 (5890–120) RUBBER FOOT PADS WITH ISOPROPYL ALCOHOL. APPLY 3M SCOTCH GRIP #1357 HI PERFORMANCE CONTACT ADHESIVE AND REMOVE EXCESSIVE AMOUNT OF ADHESIVE BEFORE ATTACHING PADS TO TOP OF BASE (ITEM 1 AND 7).

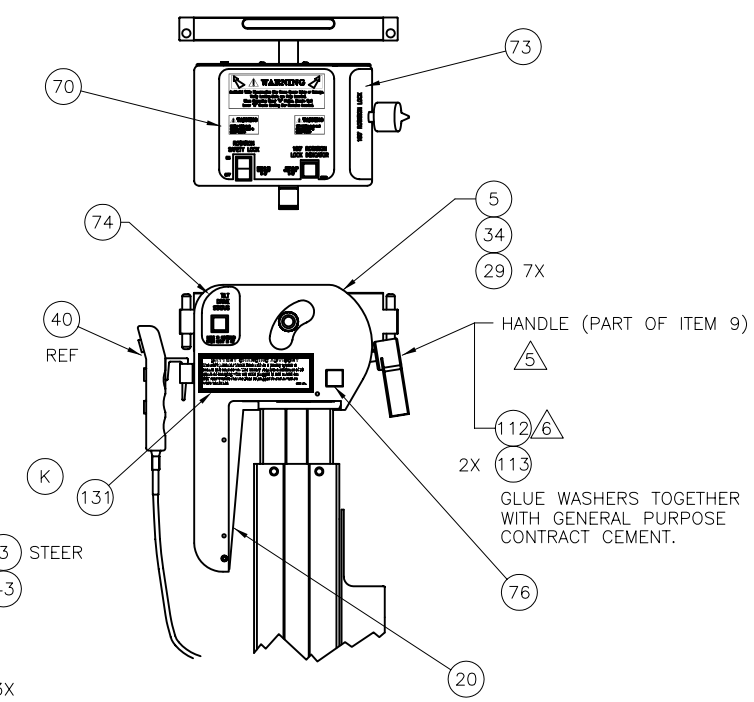

ADDITIONAL SPECIFICATION OR DOCUMENTS REQUIRED:	NO	SCALE: 1:5	SHEET 2 OF 4	SIZE D	DWG NO.: 5892	REV V

OSI ORTHOPEDIC SYSTEMS, INC. 30031 AHERN AVE. UNION CITY, CA. 94587 (510) 429–1500

REVISIONS					
REV	ZONE	DESCRIPTION	DATE	DWN	APP
		SEE SHEET 1 OF 4 FOR CHANGES.			

8 CONNECT WIRES TO CIRCUIT BREAKER AS FOLLOWS:
BLACK WIRE FROM ITEM 103 (FILTER)
TO NEAR LUG, TOP
WHITE WIRE FROM ITEM 103 (FILTER)
TO NEAR LUG, BOTTOM
BLACK WIRE FROM ITEM 102 (POWER SUPPLY)
TO FAR LUG, TOP
WHITE WIRE FROM ITEM 102 (POWER SUPPLY)
TO FAR LUG, BOTTOM
VERIFY WIRING BY PERFORMING CHECKS PER NOTE 1 (SH 1).

9 STRIP PAINT OFF (APPROX .50ø) FOR GROUND CONTACT.

10 STRIP PAINT OFF BOTTOM OF SCREW HEAD AND THREADS FOUR SCREWS (ITEM 16) FOR GROUND CONTACT. STRIP ONE SCREW FROM TOP AND BOTTOM OF HEAD AND FOOT END COLUMNS.

11 TORQUE ITEM 16 TO 12 FT–LBS.

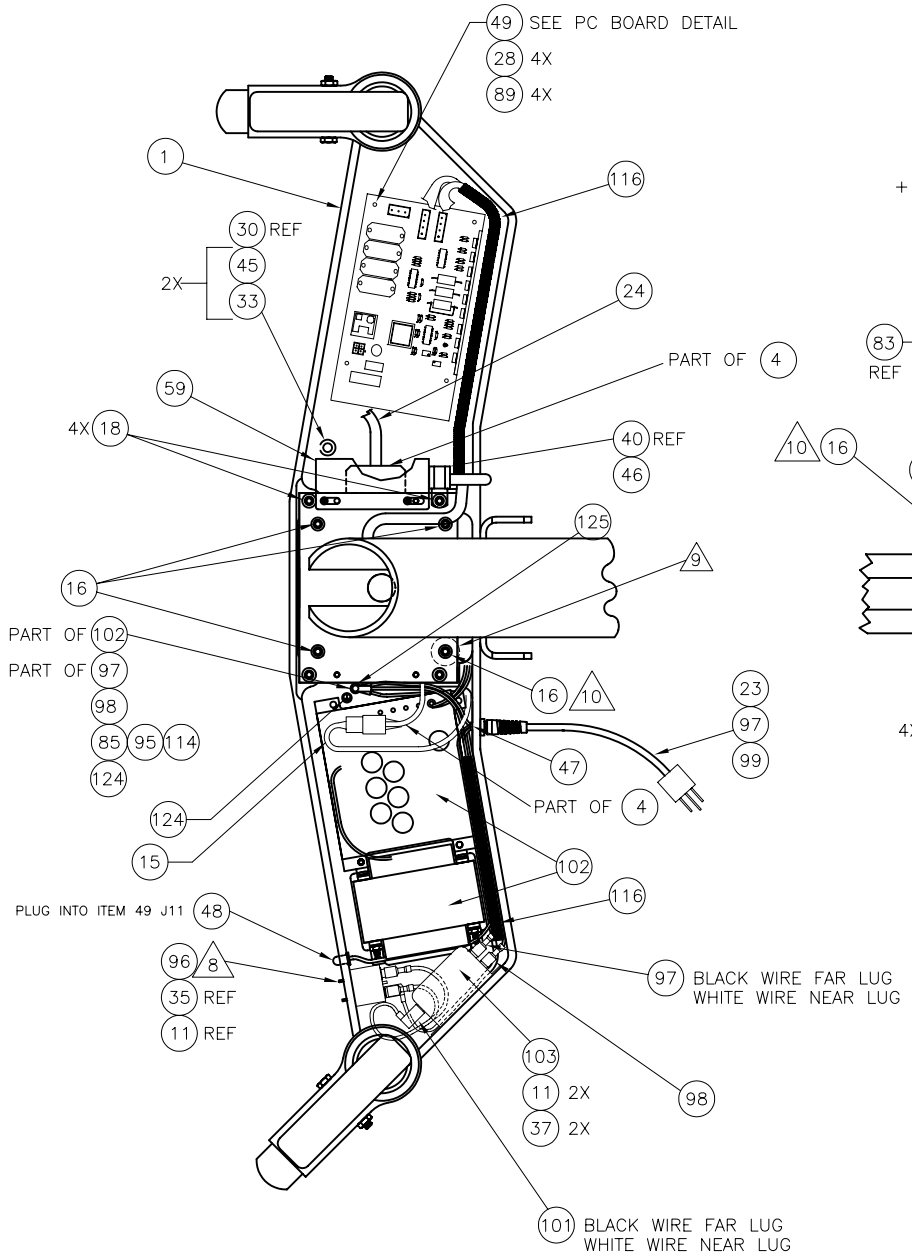

DETAIL E
SCALE 1 : 3
HEAD END

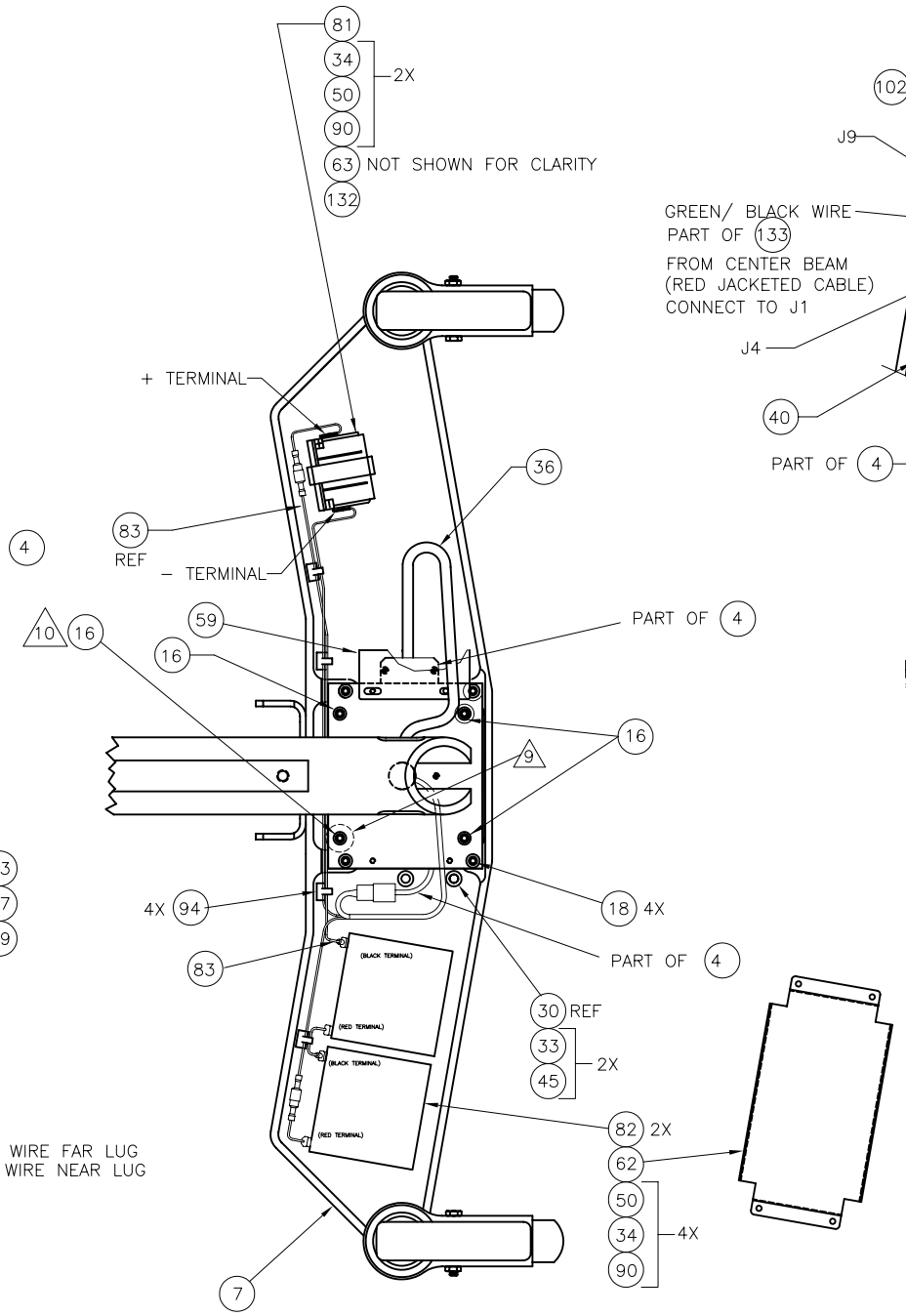

DETAIL D
SCALE 1 : 3
FOOT END

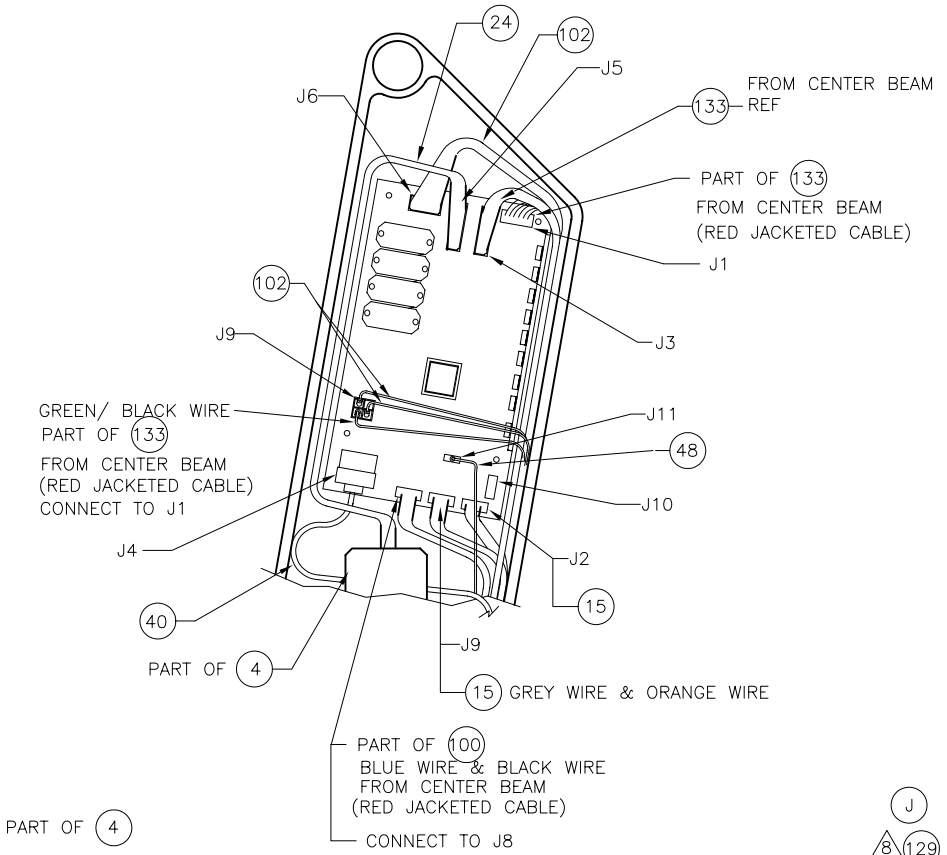

PC BOARD DETAIL

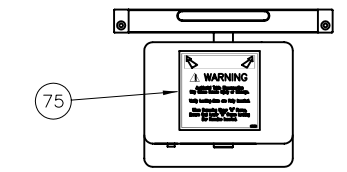

FOOT END COVER DETAIL

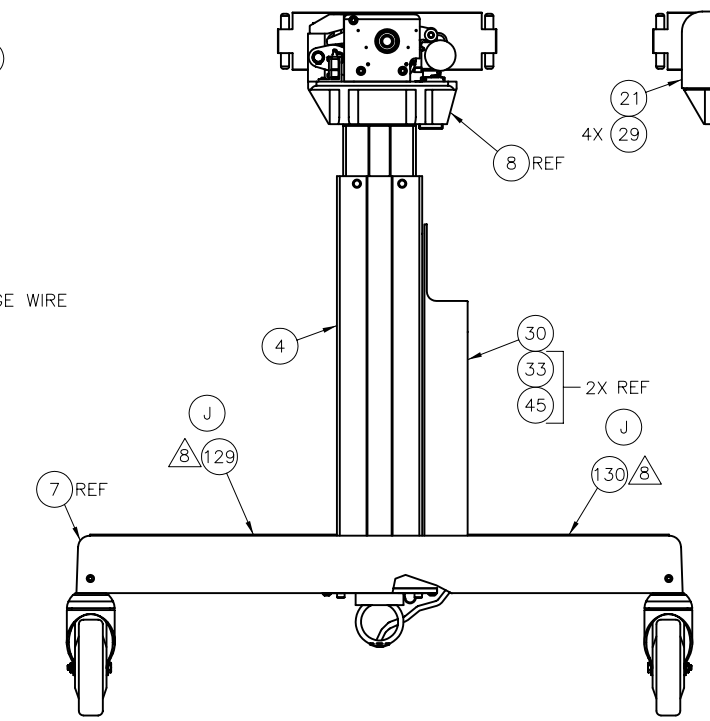

VIEW A–A

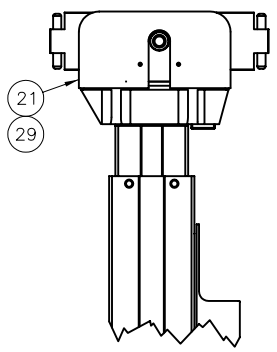

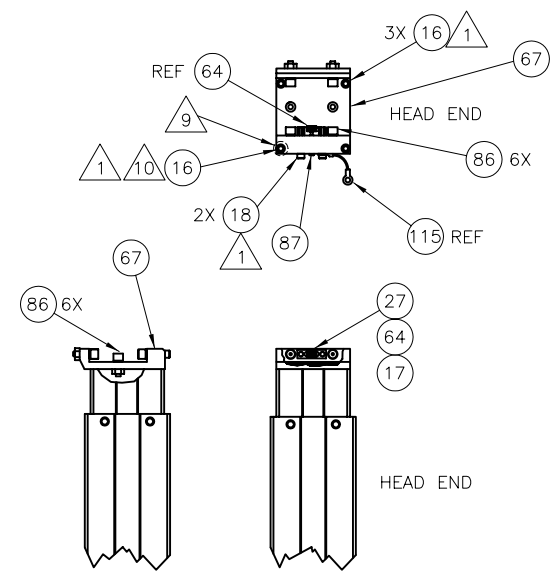

VIEW: B–B
SCALE = 1:2
SHOWN W/COVER
(ITEM 20) REMOVED

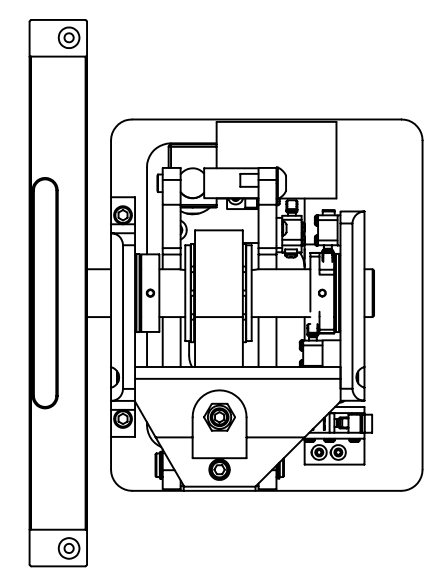

VIEW C–C
SCALE = 1:2
SHOWN W/COVER
(ITEM 21) REMOVED

OSI
ORTHOPEDIC SYSTEMS, INC.
30031 AHERN AVE.
UNION CITY, CA. 94587
(510) 429–1500

ADDITIONAL SPECIFICATION OR DOCUMENTS REQUIRED:	NO	SCALE: 1:5	SHEET 3 OF 4	SIZE D	DWG NO.: 5892	REV V

8 7 6 5 4 3 2 1

D C B A

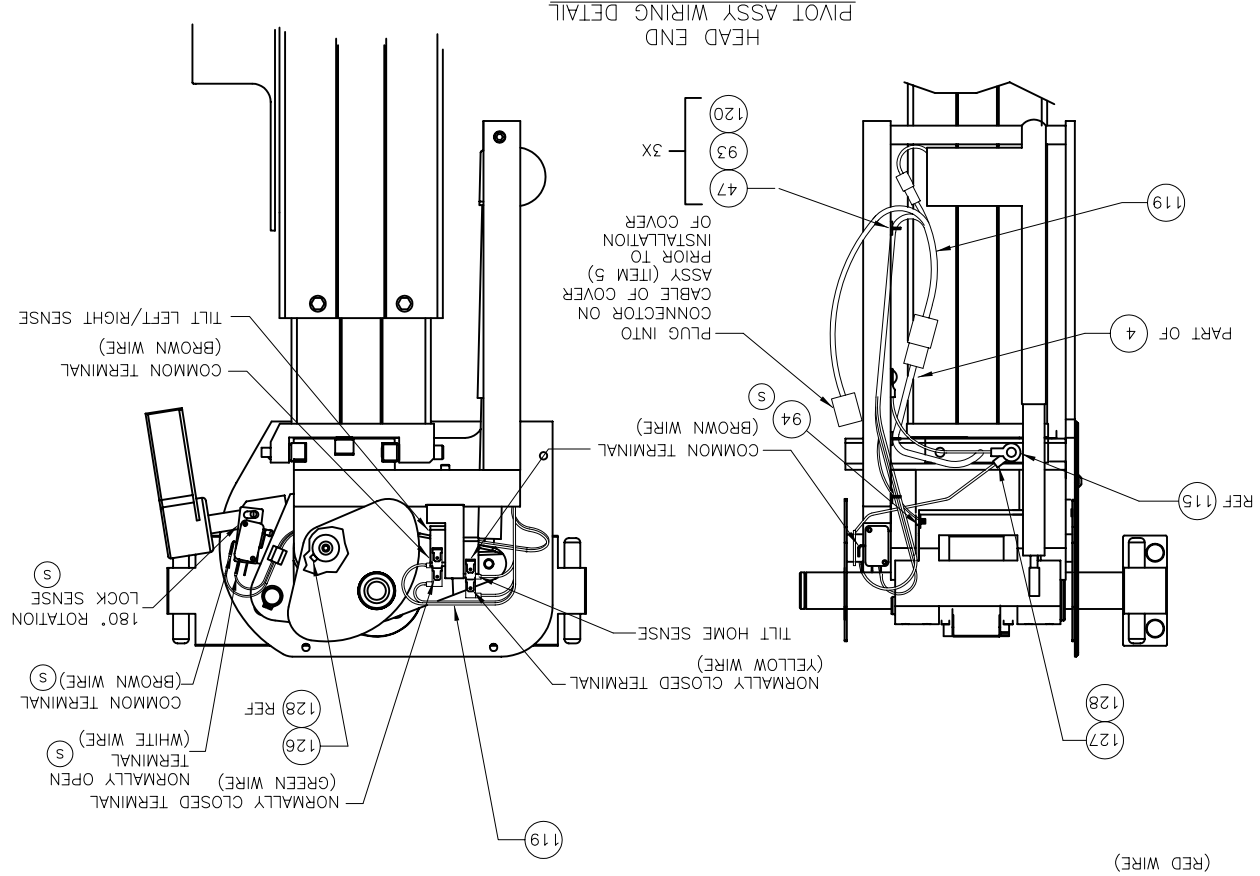

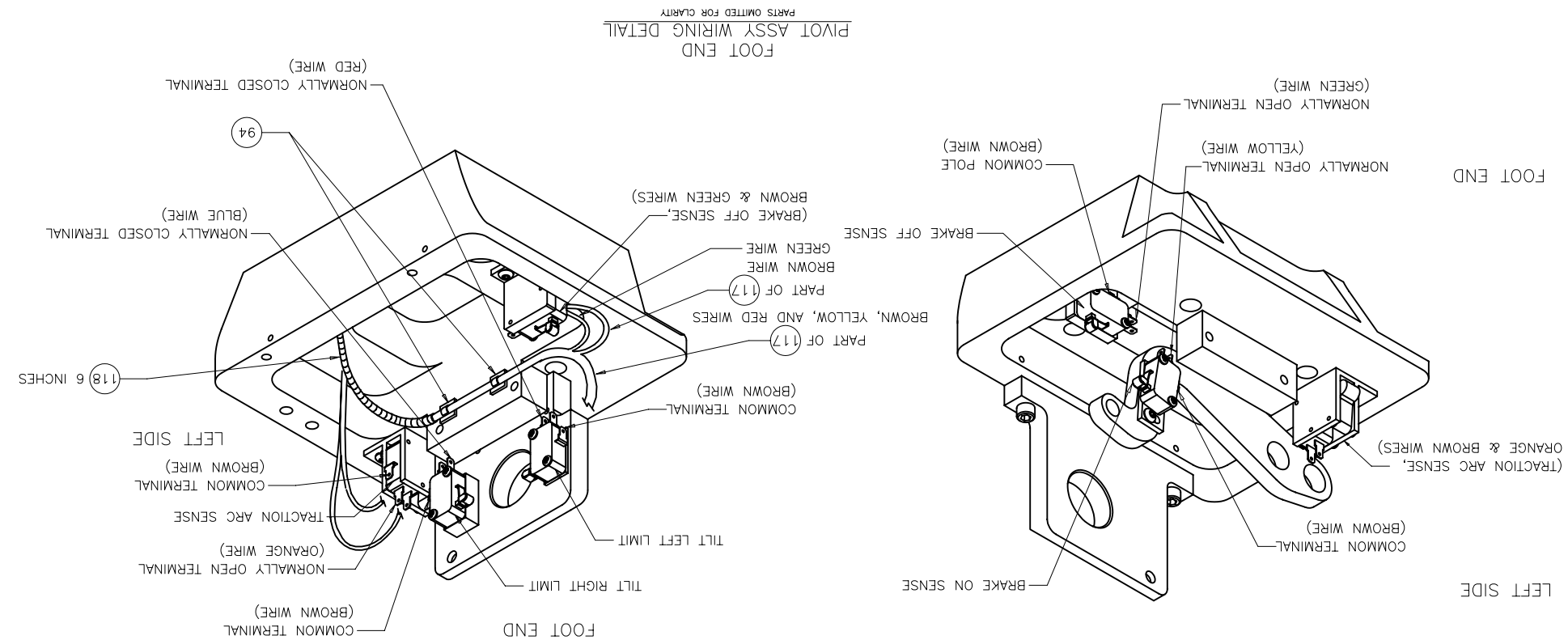

REVISIONS					
REV	ZONE	DESCRIPTION	DATE	DWN	APP
		SEE SHEET 1 OF 4 FOR CHANGES.			

ADDITIONAL SPECIFICATION OR DOCUMENTS REQUIRED: NO

SCALE 1:1 SHEET 4 OF 4 SIZE D DWG NO.: 5892 REV V

OSI
ORTHOPEDIC SYSTEMS, INC.
33031 ALVARADO AVE.
UNION CITY, CA. 94587
(510) 429-1500

PACKAGING REQUIREMENTS: ☐ INDIVIDUAL PACKAGE TO PREVENT HANDLING & SHIPPING DAMAGE
☐ BULK PACK ☒ SPECIALTY PACKAGE ☒ LABEL

PACKAGING NOTES:
1. WRAP IN BUBBLE WRAP, PUT IN PLASTIC BAG AND LABEL WITH PART NUMBER AND REVSION LEVEL.

NOTES: UNLESS OTHERWISE SPECIFIED

1. APPLY BLUE LOCTITE 242 (OR EQUIVALENT) TO THREADS PRIOR TO ASSEMBLY.
2. HOME SENSOR ADJUSTMENT AT NEXT ASSEMBLY.
3. LEFT/RIGHT SENSOR ADJUSTMENT AT NEXT ASSEMBLY.
4. 180 DEGREE ROTATION LOCK SENSOR ADJUSTMENT AT NEXT ASSEMBLY.
5. TILT ACTUATOR ROD END LENGTH AT NEXT ASSEMBLY.

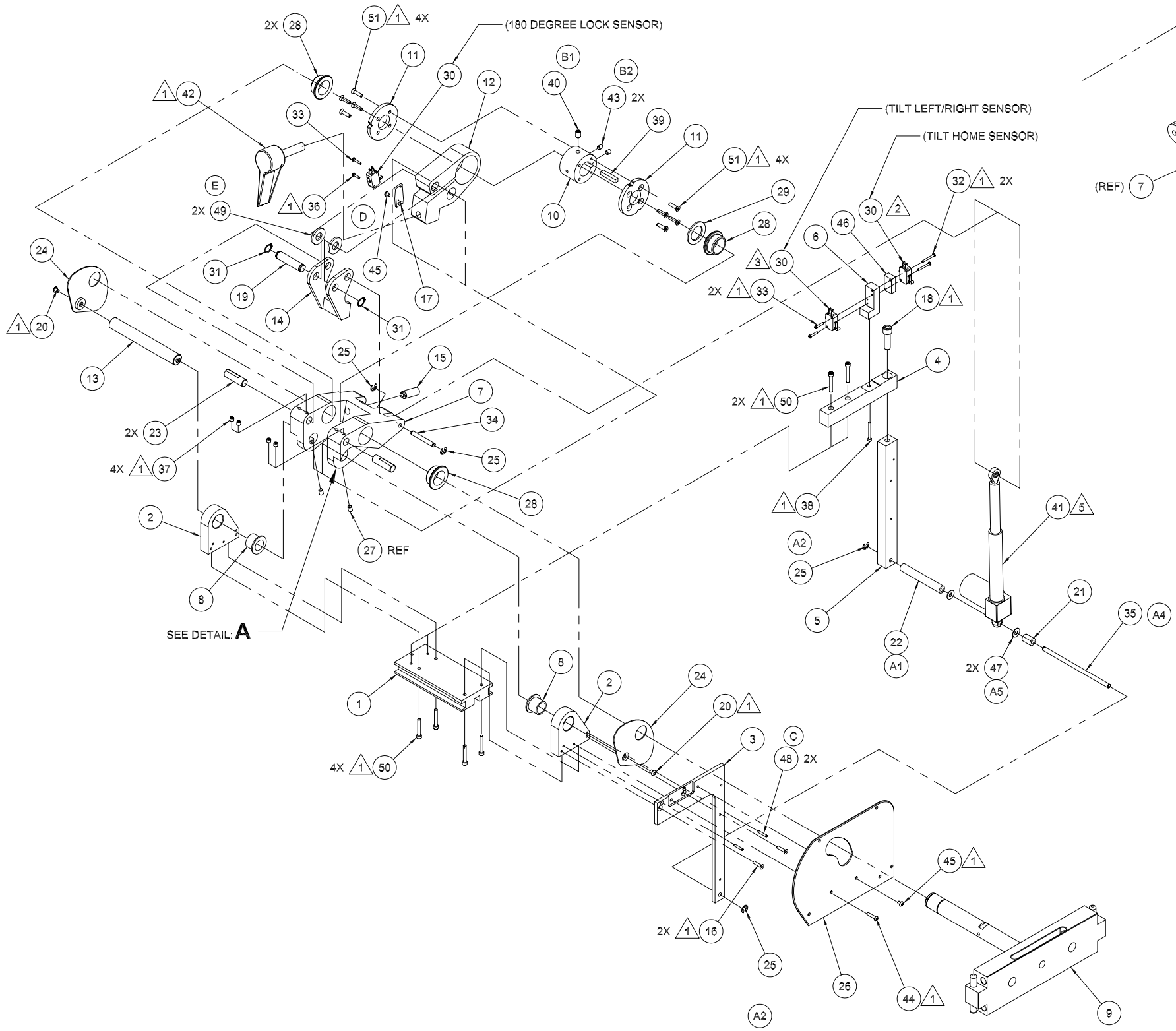

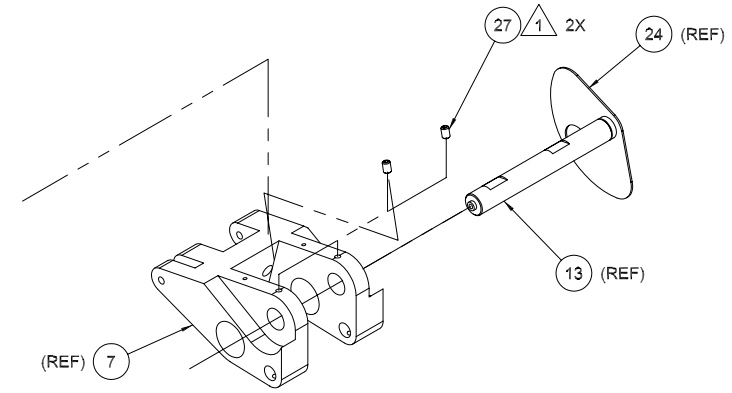

DETAIL: **A**
1:3

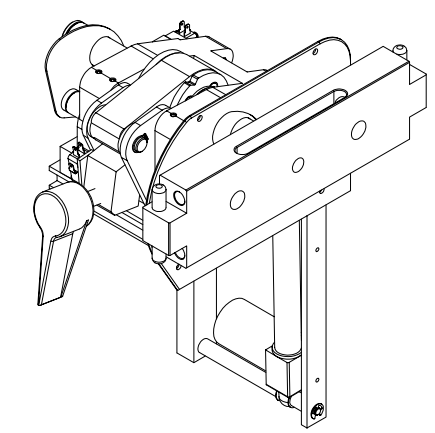

ASSEMBLED VIEW
1:3

REVISIONS

REV	ZONE	DESCRIPTION	DATE	DWN	APP
A	VAR VAR C-2 VAR B-5	1. CHANGED ITEM 22, 5892-141 WAS 5892-23 (ECN 00932). 2. CHANGED ITEM 25, QTY 4 WAS 2. 3. CHANGED ITEM 35, QTY 6 WAS 7. 4. CHANGED ITEM 36, 5892-140 WAS AAAS150FAC. 5. ADDED ITEM 49, AE025062FF, QTY 2.	12/18/00	PLB	SH
B	C-2	1. CHG. ITEM 42 P/N TO AAAY043HJM 5/16-18 X .43 SELF LOCKING SET SCREW WAS AAAY043HAC 5/16-18 X .43 SET SCREW SS. 2. CHG ITEM 45 P/N TO AAAW031HJM 1/4-20 X .31 SELF LOCKING SET SCREW WAS AAAW031HAC 1/4-20 X .31 SET SCREW SS. (ECN 02250)	5-21-02	JHG	SH
C	C-2	ADDED ITEM 50 P/N AF012075 SPRING PIN QTY. 2. CHG. ITEM 16 P/N WAS AAAP075BAC SST. (ECN 02407)	10-22-02	JHG	SH
D	VAR	CHG. ITEM 17 P/N TO 5892-71 WAS 5892-82 & ITEM 38 P/N TO AAAH050ECC WAS AAAP037AAC CHG. ITEM 47 QTY TO 2 WAS 1 & ITEM 33 QTY TO 3 WAS 4 MOVED ITEM 30 SWITCH FROM ITEM 7 PILLOW BLOCK TO ITEM 12 BRAKE CLAMP (ECN 02418)	6-23-03	JHG	SLH
E	VAR	ADDED ITEM 51 P/N AF054112AF NYLON WASHER, QTY. 2 (ECN 03144).	10/27/03	PLB	SH
F	C2 C2	AAAT087CAC WAS AAAT125CAC (ECN 04153) AAAT050BAC WAS AAAT075BAC	3/14/04	KM	.

ITEM	PART NO.	DESCRIPTION	QTY
E	51	AAAT050BAC	#10-32 UNF X .50 FLAT HD SKT SCREW S.S.	8
F C	50	AAAT087CAC	#10-32 UNF X .87 CAP HD SOCKET SCR S.S.	6
A5	49	AE054112AF	.54 ID X 1.12 OD X .12 THK NYL FL WASH	2
	48	AF012075	.125 X .75 SPRING PIN	2
D	47	AE025062FF	.62 DIA. X .25 ID WASHER NYLON	2
	46	5892-78	SPACER, SWITCH	1
B2	45	AAAP025AAC	#8-32 X .25 SST BTNHD SKT SCR	2
	44	AAAP075AAC	#8-32 X .75 SST BTNHD SKT SCR	1
	43	AAAW031HJM	1/4-20 X .31 SST SET SCR W/NYLOCK	2
B1	42	5892-100	HANDLE ASSEMBLY	1
	41	5892-17	TILT ACTUATOR	1
	40	AAAY043HJM	5/16-18 X .43 SST SET SCR W/NYLOCK	1
	39	5892-72	PIVOT KEY	1
D	38	AAAM125CAC	#6-32 X 1.25 SST CAP HD SKT SCR	1
	37	AAAW025HAC	1/4-20 X .25 SST SET SCR	4
A4	36	AAAH050ECC	#4-40 X .50 SST PAN HD SCREW	1
A3	35	5892-140	TILT ACTUATOR END SHAFT	1
	34	5892-114	ROD END SHAFT	1
	33	AAAH062ECC	#4-40 X .62 SST PAN HD SCREW	3
	32	AAAH100ECC	#4-40 X 1.00 SST PAN HD SCREW	2
	31	AJ0103	RETAINING RING, 1/2 DIA SHAFT SS	2
	30	NV0391	SNAP ACTION SWITCH	3
	29	AE100156AC	1.0 ID SST FLAT WASHER	1
	28	5840-164	FLANGE BEARING, MACHINED	3
	27	AAAW037HAC	1/4-20 X .37 SST SET SCR	2
	26	5892-29	FACE PLATE, HEAD END COVER	1
A2	25	AJ0100	1/4 DIA E-RING	4
	24	5892-45	PIVOT COVER WELDMENT	2
	23	5892-92	SHAFT, CLAMP PIVOT	2
A1	22	5892-141	SHAFT SPACER, LONG	1
	21	5892-24	ACTUATOR MOUNT BAR, SHORT	1
	20	AAAT025AAC	#10-32 X .25 SST BTN HD SKT SCR	2
	19	5892-93	CLAMP PIN	1
	18	AABB125CAC	3/8-16 UNC X 1.25 SST CAP HD SKT SCR	1
D	17	5892-71	ADJUSTABLE SWITCH MOUNT	1
C	16	AAAP075BA	#8-32 X .75 FLAT HD SKT SCR	2
	15	NG0734	1/2-13 X 1.25 SPRING PLUNGER	1
	14	5892-34	WELDMENT, ROCKER, BRAKE	1
	13	5892-91	SHAFT, LOWER	1
	12	5892-27	CLAMP, BRAKE HEAD END	1
	11	5892-43	FLANGE, BRAKE, HEAD END	2
	10	5892-30	DRUM, BRAKE, HEAD END	1
	9	5892-38	WELDMENT, CROSSBAR, HEAD END	1
	8	5892-101	BUSHING, PIVOT ASSEMBLY	2
	7	5892-31	PILLOW BLOCK, HEAD END PIVOT	1
	6	5892-81	BRACKET, HOME SENSOR	1
	5	5892-25	VERTICAL SUPPORT, ACTUATOR MOUNT	1
	4	5892-21	ACTUATOR MOUNT, X MEMBER	1
	3	5892-22	ACTUATOR MOUNT, FRONT	1
	2	5892-37	FLANGE, TROLLY, HEAD END	2
	1	5892-36	TRACK, TROLLY, HEAD END	1

5892 MTS BASE SENSOR ADJUSTMENT PROCEDURE (80403-05)
ADDITIONAL SPECIFICATION OR DOCUMENTS REQUIRED: YES

UNLESS OTHERWISE SPECIFIED
ALL DIMENSIONS INCLUDING CHEM. APPLIED/PLATED FINISH.
REMOVE BURRS & SHARP EDGES
DO NOT SCALE DRAWING
MACH BURR: ✓
TOLERANCES
.XX ± .030
.XXX ± .010
.XXXX ± .005
.XXXXX ± .0010
ANGLES ± 1°

CONFIDENTIAL
THIS DOCUMENT SHALL NOT BE REPRODUCED, NOR SHALL THE INFORMATION CONTAINED HEREIN BE USED BY OR DISCLOSED TO OTHERS EXCEPT AS APPROVED AUTHORIZED IN WRITING BY ORTHOPEDIC SYSTEMS INC.

APPROVALS		DATE
DRAWN BY: M. DeMARIA	INIT: MCD	11-12-99
ENGR: R. KLEIN	INIT: RK	2/26/00
CHKR:	INIT:	
MFG APPR.:	INIT:	
NEXT ASSY: 5892	ECN NO.: 99345	
SCALE: 1:4	SHEET 1 OF 1	

OSI
ORTHOPEDIC SYSTEMS, INC.
5028 ALVARADO AVE.
UNION CITY, CA. 94587
(510) 489-1600

MATERIAL: SEE PARTS LIST

TITLE: HEAD END PIVOT ASSEMBLY

SIZE D | DWG NO.: 5892-1 | REV F

NOTES:

1. APPLY BLUE LOCTITE 242 (OR EQUIVALENT) TO THREADS PRIOR TO ASSEMBLY.
2. BRAKE ON LIMIT SENSOR ADJUSTMENT AT NEXT ASSEMBLY.

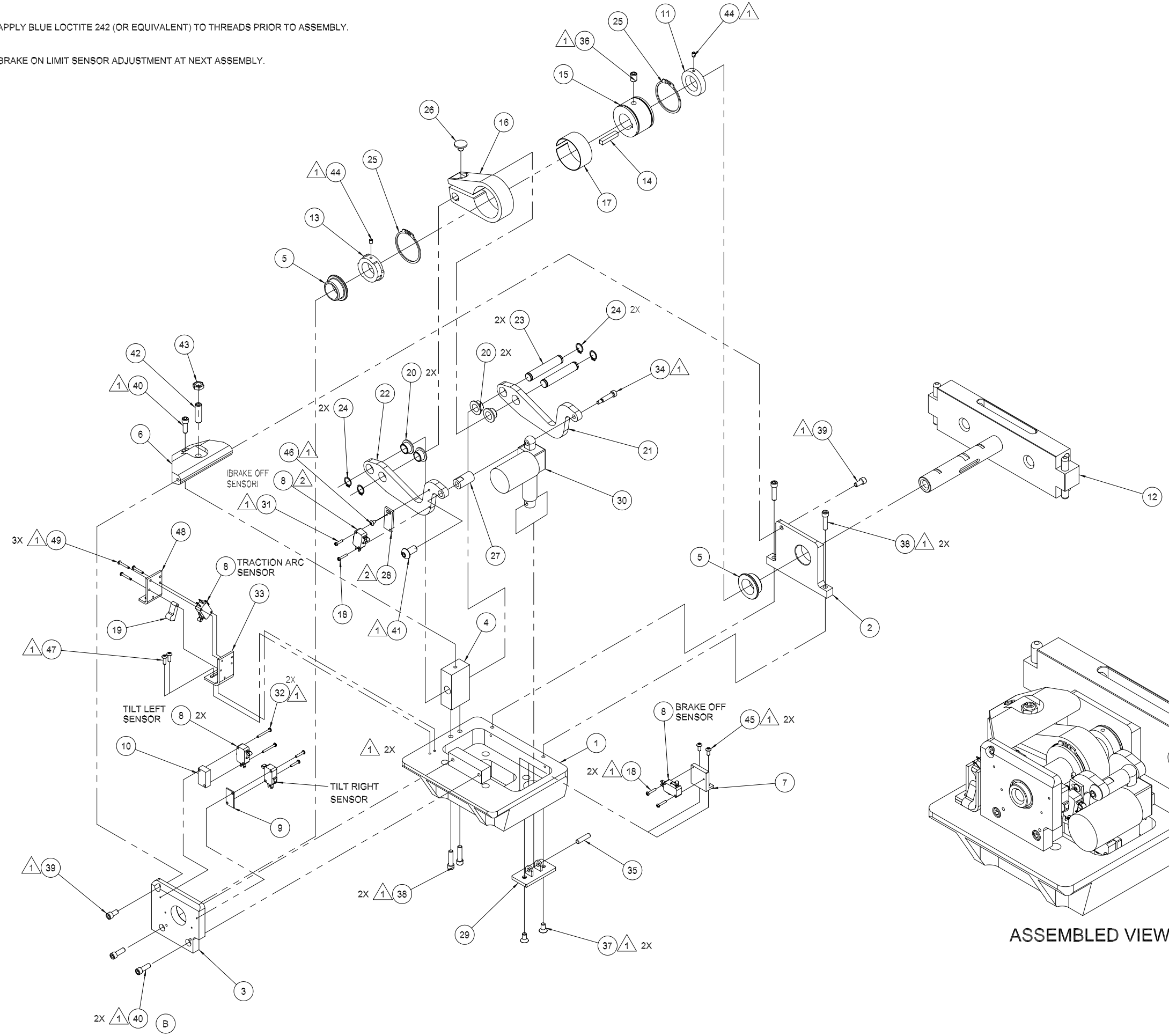

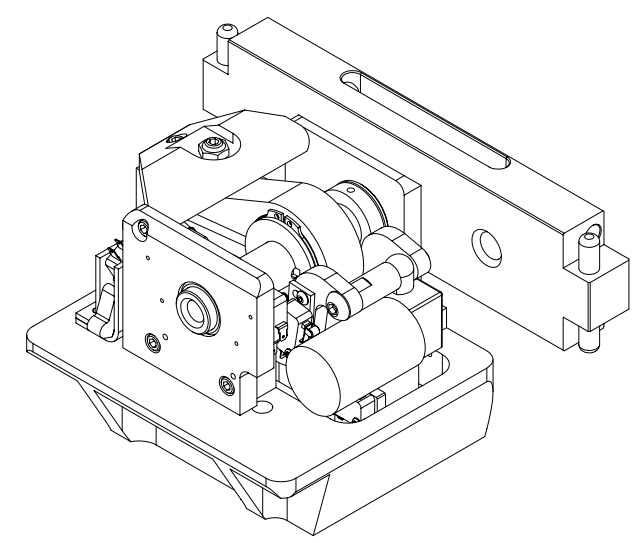

ASSEMBLED VIEW

REVISIONS					
REV	ZONE	DESCRIPTION	DATE	DWN	APP
A	B-2	CHG. ITEM 18 QUANTITY TO 5 WAS 8 (ECN 01153) ADDED ITEM 49 P/N AAAH075ECC QTY. 2	05-17-01	JHG	SH
B	C-2	CHG. ITEM 38 QTY. TO 4 WAS 6 & ITEM 40 QTY. TO 3 WAS 1 (ECN 01310)	09-20-01	JHG	.

	ITEM	PART No.	DESCRIPTION	QTY
A	49	AAAH075ECC	#4-40 X .75 SST PAN HD SCREW	3
	48	5892-118	BRAKET, SWITCH, FOOT END	1
	47	AAAP050AAC	#8-32 X .50 SST BTNHD SKT SCR	2
	46	AAAP025AAC	#8-32 X .25 SST BTNHD SKT SCR	1
	45	AAAP037AAC	#8-32 X .37 SST BTNHD SKT SCR	2
	44	AAAT025HAC	#10-32 X .25 SST SKT SET SCR	2
	43	ADBCNC	3/8-24 SST HEX JAM NUT	1
	42	AABC125HAC	3/8-24 X 1.25 SST SCK SET SCR	1
	41	AABB075AAC	3/8-16 X .75 SST BTNHD SKT SCR	1
B	40	AAAW075CAC	1/4-20 X .75 SST CAP HD SKT SCR	3
	39	AAAW050CAC	1/4-20 X .50 SST CAP HD SKT SCR	2
B	38	AAAW100CAC	1/4-20 X 1.00 SST CAP HD SKT SCR	4
	37	AAAW050BAC	1/4-20 X .50 SST FLHD SKT SCR	2
	36	AABB050HA	3/8-16 X .50 SCK SET SCR	1
	35	AM025100	.25 DIA X 1.00 DOWEL PIN	1
	34	AAAS087FA	1/4 DIA. X .875 SKT SHOULDER SCR	1
	33	5892-117	BRACKET, SWITCH, FOOT END	1
	32	AAAH100ECC	#4-40 X 1.00 SST PAN HD SCREW	2
	31	AAAH050ECC	#4-40 X .50 SST PAN HD SCREW	1
	30	5892-16	BRAKE ACTUATOR	1
	29	5892-68	MOTOR MOUNT WELDMENT, LOWER	1
	28	5892-71	ADJUSTABLE SWITCH MOUNT	1
	27	5892-61	MOTOR MOUNT, UPPER	1
	26	5840-165	BRAKE INSERT	1
	25	AJ0107	2.0 DIA. RETAINING RING	2
	24	AJ0103	1/2 DIA RETAINING RING	4
	23	5892-62	BRAKE PIN	2
	22	5892-56	PIVOT ARM, REAR	1
	21	5892-55	PIVOT ARM, FRONT	1
	20	NA0163	1/2 ID BUSHING	4
	19	5892-76	CUTOUT SWITCH PADDLE	1
A	18	AAAH062ECC	#4-40 X .62 SST PAN HD SCREW	5
	17	5840-166	FRICTION RING	1
	16	5892-53	BRAKE CLAMP	1
	15	5892-54	BRAKE DRUM	1
	14	5892-72	PIVOT KEY	1
	13	5892-57	CAM COLLAR	1
	12	5892-47	FOOT END CROSSBAR WELDMENT	1
	11	5892-60	COLLAR	1
	10	5892-78	SPACER, SWITCH	1
	9	5892-58	SPACER, SWITCH	1
	8	NV0391	SNAP ACTION SWITCH	5
	7	5892-65	PLATE, SWITCH MOUNT	1
	6	5892-59	BRAKE SUPPORT	1
	5	5840-164	FLANGE BEARING, MACHINED	2
	4	5892-52	PIVOT ARM MOUNT	1
	3	5892-51	REAR BEARING PLATE	1
	2	5892-50	FR0NT BEARING PLATE	1
	1	5892-63	BASE, FOOT END	1

5892 MTS BASE SENSOR ADJUSTMENT PROCEDURE (80403-05)

ADDITIONAL SPECIFICATION OR DOCUMENTS REQUIRED: YES

UNLESS OTHERWISE SPECIFIED: ALL DIMS IN INCHES INCLUDING CHAM. APPROPRIATED FINISH. REMOVE BURRS & SHARP EDGES DO NOT SCALE DRAWING. MACH SURF. TOLERANCES X= ±.030 XX= ±.010 XXX= ±.005 XXXX= ±.0010 ANGLES ±1°

CONFIDENTIAL: THIS DOCUMENT SHALL NOT BE REPRODUCED, NOR SHALL THE INFORMATION CONTAINED HEREIN BE USED BY OR DISCLOSED TO OTHERS EXCEPT AS EXPRESSLY AUTHORIZED IN WRITING BY ORTHOPEDIC SYSTEMS INC.

APPROVALS		DATE
DRAWN BY: M. DeMARIA	INIT: MCD	11-15-99
ENGR: R. KLEIN	INIT: RK	02-26-00
CHKR:	INIT:	
MFG APPR.:	INIT:	
NEXT ASSY.: 5892	ECN NO.: 99345	
SCALE: 1 : 3	SHEET 1 OF 1	

OSI — ORTHOPEDIC SYSTEMS, INC. 30031 ALHERIN AVE. UNION CITY, CA 94587 (510) 429-1600

MATERIAL: SEE PARTS LIST

TITLE: FOOT END PIVOT ASSEMBLY

SIZE: D — DWG NO.: 5892-2 — REV: B

REVISIONS					
REV	ZONE	DESCRIPTION	DATE	DWN	APP
B	D-3	CHG TO 4PDT, CORRECT DWG ERRORS (ECN 01005)	12-14-00	AY	SH
C	VAR	REVISED PER (ECN 02296)	01-16-02	JHG	SH
D	VAR	REMOVE COLUMNS	07-17-03	JC	·

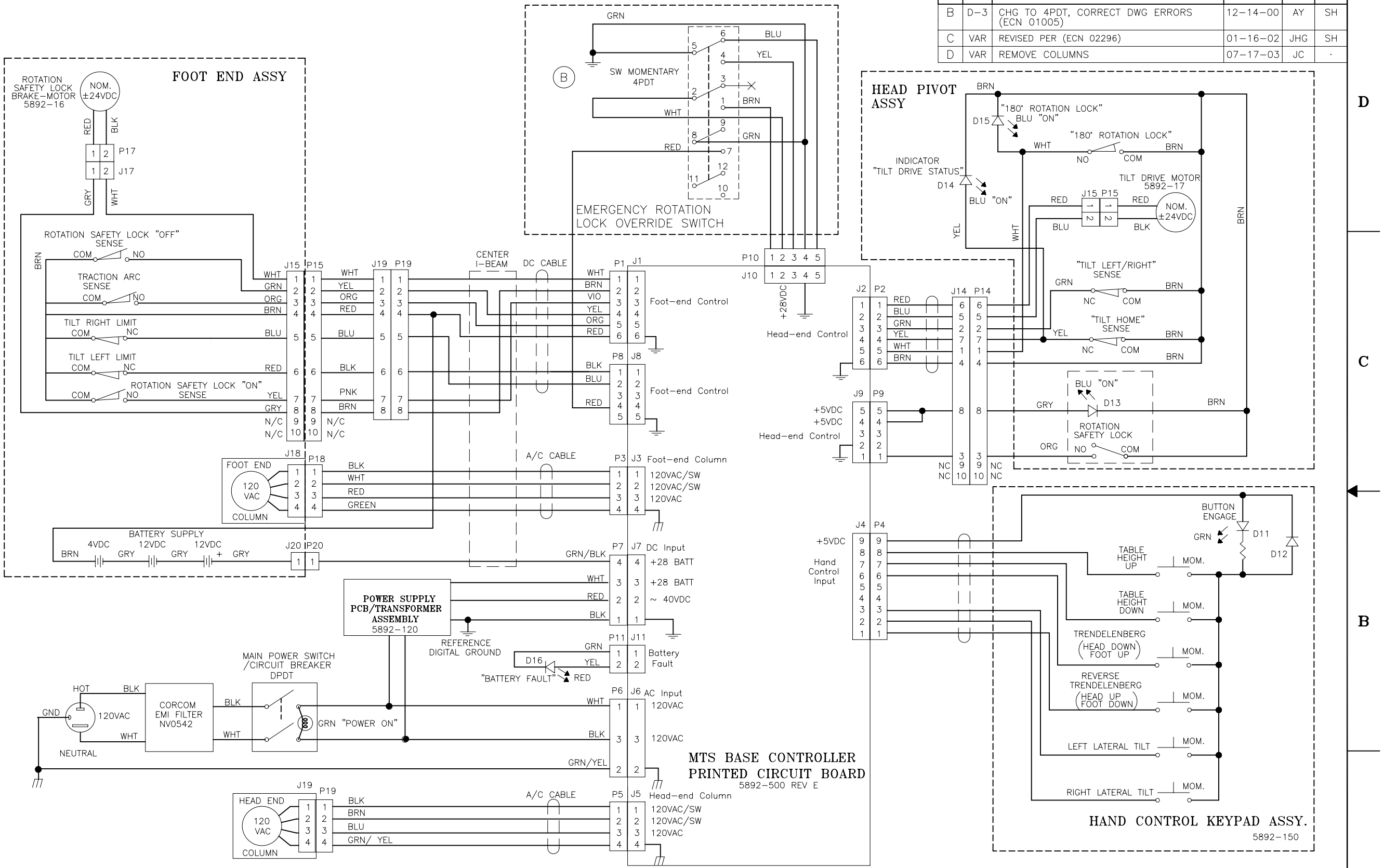

UNLESS OTHERWISE SPECIFIED:
ALL DIMS IN INCHES INCLUDING CHEM. APPLIED/PLATED FINISH. REMOVE BURRS & SHARP EDGES. DO NOT SCALE DRAWING.
MACH SURF. ✓
TOLERANCES .X=±.030 .XX=±.010 .XXX=±.005 .XXXX=±.0010 ANGLES ±1°

CONFIDENTIAL
THIS DOCUMENT SHALL NOT BE REPRODUCED, NOR SHALL THE INFORMATION CONTAINED HEREIN BE USED BY OR DISCLOSED TO OTHERS EXCEPT AS EXPRESSLY AUTHORIZED IN WRITING BY ORTHOPEDIC SYSTEMS INC.

APPROVALS		DATE
DRAWN BY: R KLEIN	INIT: RK	12-20-99
ENGR: R KLEIN	INIT: RK	12-20-99
CHKR:	INIT:	
MFG APPR.:	INIT:	
NEXT ASSY.: 5892	ECN NO.:	
SCALE: NONE	SHEET 1 OF 1	

OSI
ORTHOPEDIC SYSTEMS, INC.
30031 AHERN AVE.
UNION CITY, CA. 94587
(510) 429-1500

MATERIAL: NONE

TITLE: INTERCONNECT DIAGRAM ADVANCED CONTROL BASE

SIZE C | DWG NO.: 5892-125 | REV D